Hardware and Installation Manual

X2 base 10 v2

MAEN331
2024-01

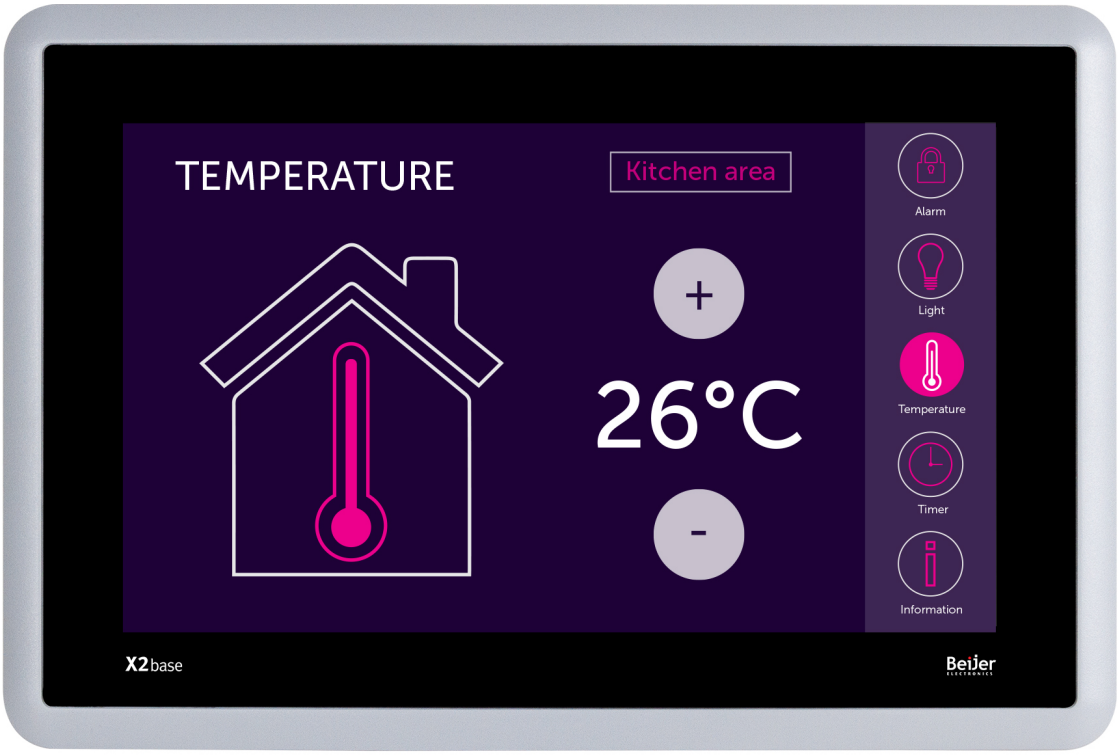

Beijer ELECTRONICS
People & Technology. Connected.

Foreword

All HMI panels are developed to satisfy the demands of human-machine communication. Built-in functions such as displaying and controlling text, dynamic indication, time channels, alarm and recipe handling are included. The HMI panel works primarily in an object-oriented way, making it easy to understand and use. Configuration is carried out on a PC using iX Developer software. The project can then be transferred and stored in the HMI panel itself. Various types of automation equipment such as PLCs, servos or drives can be connected to the HMI panels. In this manual, the term “the controller” refers to the connected equipment. This manual explains how to install the HMI panel. Please refer to the iX Developer reference manual for further information.

Copyright © 2023 Beijer Electronics AB. All rights reserved.

The information in this document is subject to change without notice and is provided as available at the time of publishing. Beijer Electronics AB, including all its group companies, reserves the right to change any information without updating this publication. Beijer Electronics AB, including all its group companies, assumes no responsibility for any errors that may appear in this document. Read the entire document prior to installing and using this equipment. Only qualified personnel may install, operate or repair this equipment. Beijer Electronics AB, including all its group companies, are not responsible for modified, altered or renovated equipment. Because the equipment has a wide range of applications, users must acquire the appropriate knowledge to use the equipment properly in their specific applications. Persons responsible for the application and the equipment must themselves ensure that each application is in compliance with all relevant requirements, standards and legislation in respect to configuration and safety. Only parts and accessories manufactured according to specifications set by Beijer Electronics AB, including all its group companies, may be used.

BEIJER ELECTRONICS AB, INCLUDING ALL ITS GROUP COMPANIES, SHALL NOT BE LIABLE TO ANYONE FOR ANY DIRECT, INDIRECT, SPECIAL, INCIDENTAL OR CONSEQUENTIAL DAMAGES RESULTING FROM THE INSTALLATION, USE OR REPAIR OF THIS EQUIPMENT, WHETHER ARISING IN TORT, CONTRACT, OR OTHERWISE. BUYER'S SOLE REMEDY SHALL BE THE REPAIR, REPLACEMENT, OR REFUND OF PURCHASE PRICE, AND THE CHOICE OF THE APPLICABLE REMEDY SHALL BE AT THE SOLE DISCRETION OF BEIJER ELECTRONICS AB, INCLUDING ALL ITS GROUP COMPANIES.

Head Office
Beijer Electronics AB
Box 426
201 24 Malmö, Sweden
www.beijerelectronics.com / +46 40 358600

Table of Contents

1. Safety Precautions 5
    1.1. General 5
    1.2. Hazardous Materials 5
    1.3. Disposal Requirements Under WEEE Regulations 6
    1.4. UL and cUL Installation 6
    1.5. During Installation 6
    1.6. During Use 7
    1.7. Service and Maintenance 7
        1.7.1. Cleaning the Display 7
    1.8. Dismantling and Scrapping 8
    1.9. Appearance of Air in Touch Screen 8
2. Naming Convention 9
3. Installation 10
    3.1. Space Requirements 10
    3.2. Installation Process 10
        3.2.1. Connections to the Controller 12
        3.2.2. Other Connections and Peripherals 12
        3.2.3. Open Ports 12
4. Technical Data 13
5. Chemical Resistance 15
    5.1. Touch Screen and Overlay Material 15
        5.1.1. Protective Film 15
        5.1.2. Touch Screen Surface 15
        5.1.3. Touch Screen Protector 16
6. HMI Panel Drawings 17
    6.1. Connectors 17
    6.2. HMI Panel Outline 18
7. Additional Installation Tips 20
    7.1. Grounding the HMI Panel 20
    7.2. Ethernet Connection in the HMI Panel 21
    7.3. To Achieve Better EMC Protection 22
    7.4. Ambient Temperature 23
    7.5. Safety 24
    7.6. Galvanic Isolation 25
    7.7. Cable and Bus Termination RS-485 26
    7.8. USB Flash Drive 26
    7.9. Image Sticking 26

1. Safety Precautions

Both the installer and users of the HMI panel must read and understand this manual.

1.1. General

- Read the safety precautions carefully.
- Check the delivery for transportation damage. If damage is found, notify the supplier as soon as possible.
- Do not use the HMI panel in an environment with high explosive hazards.
- The supplier is not responsible for modified, altered, or reconstructed equipment.
- Use only parts and accessories manufactured according to specifications of the supplier.
- Read the installation and operating instructions carefully before installing, using or repairing the HMI panel.
- Never allow fluids, metal filings or wiring debris to enter any openings in the HMI panel. This may cause fire or electrical shock.
- Only qualified personnel may operate the HMI panel.
- Storing the HMI panel where the temperature is lower or higher than recommended in this manual can cause the LCD display liquid to congeal and become isotropic.
- The LCD display liquid contains a powerful irritant. In case of skin contact, wash immediately with plenty of water. In case of eye contact, hold the eye open, flush with plenty of water and get medical attention.
- The figures in this manual serve an illustrative purpose. Because of the many variables associated with any particular installation, the supplier cannot assume responsibility for actual use based on the figures.
- The supplier neither guarantees that the HMI panel is suitable for your particular application, nor assumes responsibility for your product design, installation or operation.
- It is recommended to turn on and shut down the HMI panel at least once before installing any components or cards, or before connecting the HMI panel to external devices, for example serial devices.

1.2. Hazardous Materials

Part description 零件描述	Toxic and hazardous materials or elements 有毒和有害的材料或元素					
PCB and electronic components	Pb	Hg	Cd	Cr6+	PBB	PBDE
PCB 和电子元件	X	O	O	O	O	O

O: Indicates that the concentration of the hazardous substance in all homogeneous materials in the parts is below the relevant threshold of the GB/T 26572-2011 standard.

O: 表示该有害物质在该部件所有均质材料中的含量均在 GB/T 26572-2011 规定的限 量要求以下。

X: Indicates that the concentration of the hazardous substance of at least one of all homogeneous materials in the parts is above the relevant threshold of the GB/T 26572-2011 standard. But still complies with the EU RoHS Directive 2011/65/EU.

X: 表明该有害物质至少在部件的某一均质材料中的含量超出 GB/T 26572-2011 规定 的限量要求。但仍然符合 EU RoHS 指令 2011/65/EU。

1.3. Disposal Requirements Under WEEE Regulations

For professional users in the European Union: If you wish to discard electrical and electronic equipment (EEE), please contact your dealer or supplier for further information.

For disposal in countries outside of the European Union: If you wish to discard this product please contact your local authorities or dealer and ask for the correct method of disposal.

1.4. UL and cUL Installation

Indoor use only. Altitude up to 2,000 m. Pollution Degree 2. Do not use in wet locations or in areas where moisture or condensation can be expected.

WARNING

- The temperature resistance of the power cable used must be at least 55°C.
  La tenue en température du câble d'alimentation utilisé doit être d'aumoins 55°C.
- Use copper conductors only.
  Utilisez uniquement des conducteurs en cuivre.
- Power Port: Use cable type - AWG (American Wire Gauge) 12~28 and tighten terminal screws with a torque value of 4.5 lb-in.
  Port D'alimentation: Utilisez le type de câble - AWG (American Wire Gauge) 12 ~ 28 et serrez les vis des bornes avec une valeur de couple de 4.5 lb-in.
- COM C Port: Use cable type - AWG (American Wire Gauge) 16~28 and tighten terminal screws with a torque value of 1.7 lb-in.
  COM C Port: Utilisez le type de câble - AWG (American Wire Gauge) 16~28 et serrez les vis des bornes avec une valeur de couple de 1.7 lb-in.
- If the equipment is used in a manner not specified, the protection provided by the equipment may be impaired.
  Si l'équipement est utilisé d'une manière non spécifiée, la protection fournie par l'équipement peut être détérioré.
- The person responsible for installation safety for all systems covered by the equipment is the person who installs the system.
  La personne responsable de la sécurité de l'installation pour tous les systèmes couverts par l'équipement, est la personne qui installe le système.
- Repairs may only be carried out by the manufacturer.
  Les réparations ne peuvent être effectuées que par le fabricant.
- The manufacturer is not liable for damages resulting from failure to comply with the manufacturer's instructions.
  Le fabricant n'est pas responsable des dommages résultant du non-respect des instructions du fabricant.

1.5. During Installation

- Install the HMI panel according to the accompanying installation instructions.
- Ground the HMI panel according to the accompanying installation instructions.
- Only qualified personnel may install the HMI panel.

- Separate the high voltage, signal, and supply cables.
- Make sure that the voltage and polarity of the power source is correct before connecting the HMI panel to the power outlet.
- Peripheral equipment must be appropriate for the application and location.

1.6. During Use

- Keep the HMI panel clean.
- Emergency stop and other safety functions may not be controlled from the HMI panel.
- Do not use excessive force or sharp objects when operating the touch screen.

1.7. Service and Maintenance

- Only qualified personnel should carry out repairs.
- The agreed warranty applies.
- Before carrying out any cleaning or maintenance operations, disconnect the equipment from the electrical supply.
- Clean the display and surrounding front cover with a soft cloth and mild detergent.
- The battery must be replaced by an authorized Beijer Electronics service center.

1.7.1. Cleaning the Display

We recommend using a dry, clean cloth to wipe off dust regularly. Use alcohol or ammonia-based cleaning agent for cleaning only when necessary. When other solvents or cleaning agents are used, be sure to follow manufacturers' instructions. The agent should be applied to a clean cloth and should not be sprayed directly onto the panel surface. After cleaning the agent should be removed. Ammonia-based glass cleaners (typically 5-10% ammonia) or 75% alcohol can be used to clean the surface of PCAP and resistive touch panels. When you clean the surface of your touch panel, please follow these steps:

1. Apply cleaning agent (alcohol, bleach, or glass cleaner) to a clean cloth.
   Make sure the cloth is well saturated.
2. Wipe the touch panel surface in a "Z" motion (see illustration below).
3. Dry the panel thoroughly with a dry cloth, removing as much of the cleaning solution as possible.
4. Do not mix bleach and ammonia because this will produce a dangerous chemical reaction.
5. Please do not spray cleaning solution directly onto the touch panel surface.

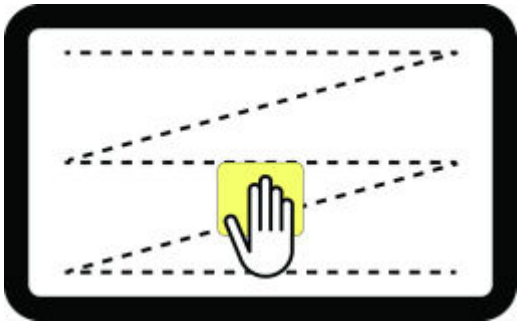

NOTE

- Cleaning solutions containing bleach, alcohol, and ammonia are corrosive to touch panel surface coatings and ITO film. Do not leave the solution on the touch panel surface for more than 2 minutes. Make sure to remove all residue when finished cleaning.
- Do not use sharp tools to clean the surface of the touch screen.
- Do not use air guns, water jets, or steam, to clean the surface of the touch screen as they may damage touch screen functionality.
- If condiments, food, or drinks are spilled on the surface of the touchscreen, please remove it immediately.
- Ensure moisture does not seep through the cable connection area from the edges during cleaning.

1.8. Dismantling and Scrapping

- Recycle the HMI panel and parts of it according to local regulations.
- The following components contain substances that might be hazardous to health and the environment: lithium battery, electrolytic capacitor, and display.

1.9. Appearance of Air in Touch Screen

The layer structure of the touch screen contains air. In rare cases, the appearance of bubbles can arise. This is purely cosmetic and does not affect the functionality of the HMI panel. The appearance can occur under certain environmental conditions such as changes in temperature, humidity, or atmospheric pressure.

2. Naming Convention

The name of each panel is based on its properties according to the table below.

Naming Convention

X2 family	Size (inches)	Generation/Version	Variant	
base	4	v2	SC	Soft Control
pro	5		SM	Soft Motion
marine (= with BL)	7		HB	High Brightness
control (= with SC)	10		HP	High Performance
motion (= with SM)	12		BL	Black
extreme	15		12V	12 Volt
	21		SL	Sealed
			RO	Rugged Only
			CO	Certification Only
			web	Web

Examples:

- X2 base 5 v2
- X2 pro 7
- X2 control 10
- X2 marine 12 SC
- X2 marine 15 HB SC
- X2 extreme 7 12V*
- X2 extreme 12 HP SC*
- X2 extreme 7 SL HP*
- X2 extreme 12 SL HP SC*
- X2 extreme 7 CO*
- X2 extreme 12 SL HP RO

NOTE
Not all combinations are available.

NOTE
* indicates variants including IECEx\ATEX and C1D2 accreditation.

3. Installation

3.1. Space Requirements

- Maximum installation plate thickness: 5 mm.

The following drawings show the space requirements in millimeters when installing the HMI panel. The drawings are only illustrative and may be out of proportion.

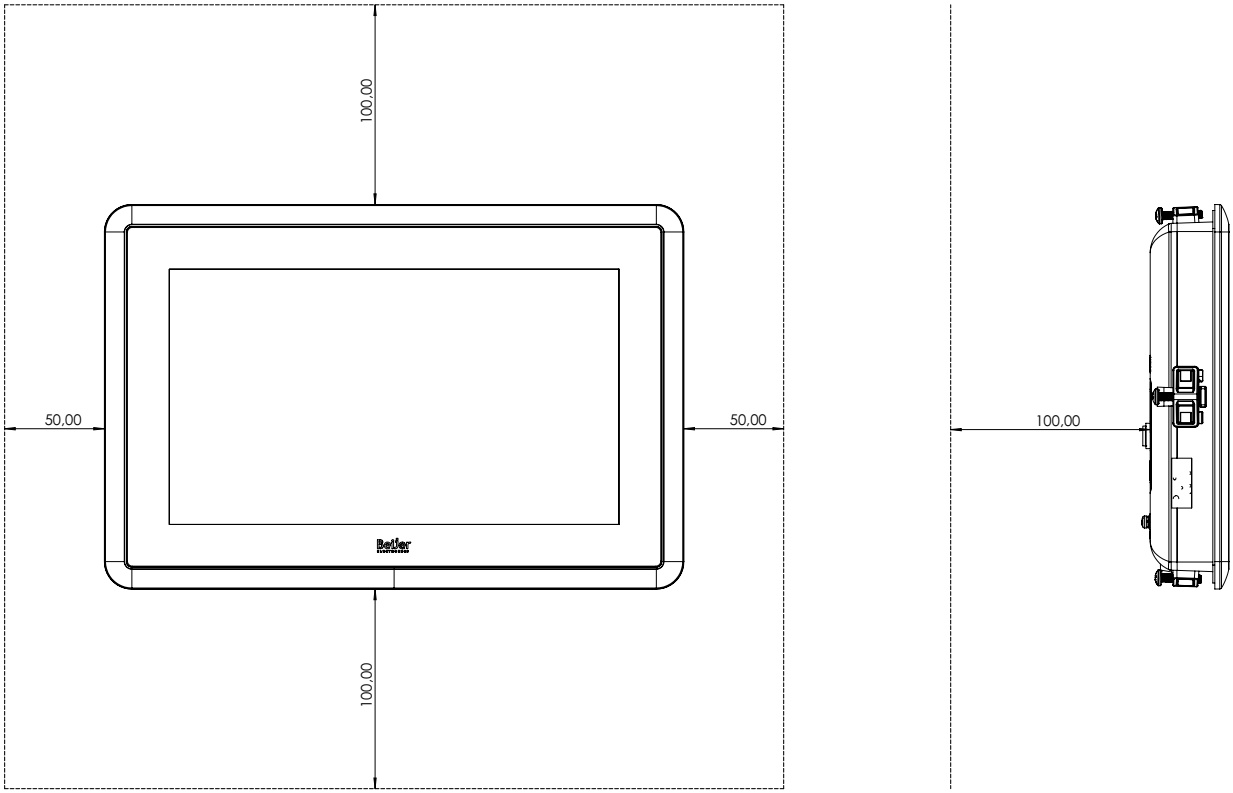

3.2. Installation Process

The following is needed:

- A Phillips/slot screwdriver

Do the following:

1. Unpack and check the delivery. If damage is found, notify the supplier.

> **NOTE**
> Place the on a stable surface during installation. Dropping the HMI panel or letting it fall may cause damage.

2. To cut a correct opening for the HMI panel, use the cut out dimensions in the outline drawing. A separate cut out drawing is available for download from the Beijer Electronics web site. For more information, see chapters *HMI Panel Drawings* and *Technical Data*.

3. Make sure that the mounting surface of the cutout is smooth and cleaned from any burrs or debris.
4. Install the HMI panel into the cutout.
5. Secure the HMI panel in position, using all the fastening holes and the provided brackets and screws.

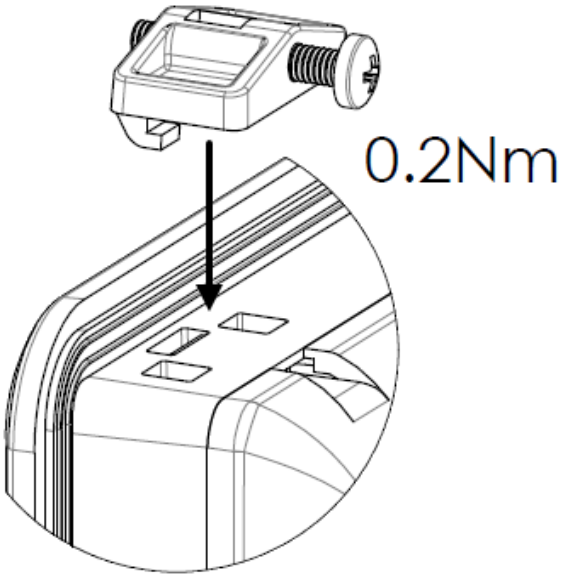

Tighten the screws to 0.15 - 0.2 Nm.

6. In cases where the front panel seal is critical, use a torque wrench to ensure all screws are torqued within the specification above.
7. Connect the cables in the specified order, according to the following drawing and steps.

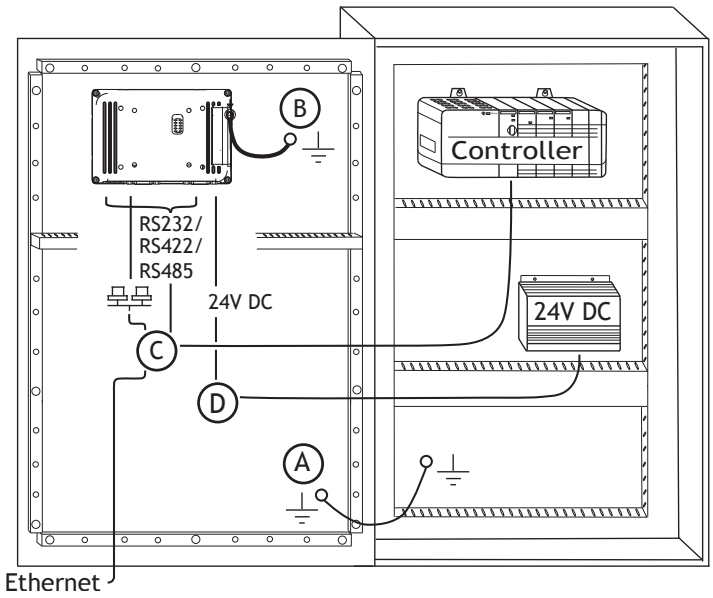

The image is illustrative only and may differ slightly from the actual panel.

- Connect cable A.
- Connect cable B, using 14-20 AWG (2.08–0.52 mm^2), 180–220 N-cm torque.
- Connect cable C.
- Connect cable D. The recommended cross-section of the cable is 1.5 mm^2.

8. Carefully remove the protective film over the HMI panel display, taking care to avoid static electricity that could damage the panel.

CAUTION

- The HMI panel must be brought to ambient temperature before it is started up. If condensation forms, ensure that the HMI panel is dry before connecting it to the power outlet.
- Ensure that the HMI panel and the controller system have the same electrical grounding (reference voltage level), otherwise errors in communication may occur.
- Ensure that the voltage and polarity of the power source is correct.
- Separate high voltage cables from signal and supply cables.
- Shielded communication cables are recommended.

3.2.1. Connections to the Controller

For information about the cables to be used when connecting the HMI panel to the controller, please refer to the help file for the driver in question.

3.2.2. Other Connections and Peripherals

Cables, peripheral equipment and accessories must be suitable for the application and its environment. For further details or recommendations, please refer to the supplier.

3.2.3. Open Ports

In the firmware there are some ports that are open by default due to the operating system or that the internal application requires it.

Type	Description	Open by default
UDP and TCP	Project transfer (9999)	Yes
UDP	Netbios (137)	Yes
UDP	Netbios (138)	No[1]

[1]Filtered.

4. Technical Data

Parameter	X2 base 10 v2
Front panel, W×H×D	290x193x40 mm
Cutout dimensions, W×H	275x177 (+/-1) mm
Mounting depth	35 mm (135 mm including clearance)
Mounting	Switchboard installation
Front panel seal	IP 65 (Non-UL certified)
Rear panel seal	IP 20 (Non-UL certified)
Touch screen material	Polyester on glass, ITO film, resistive
Frame overlay	Autoflex EBA 250L
Touch screen operations	1 million finger touch operations
Reverse side material	Plastic
Frame material	Plastic
Weight	0.86 kg
CPU	TI Sitara AM335x Single Core 600MHz, (TI AM3352BZCZ60)
Serial port COM A	Standard DSUB (9-pin, female). 1x RS-232 RX/TX with RTS/CTS, 1x RS-422 or 2x RS-485
Serial port COM B	N/A
Serial port COM C	3 pin screw connector 1x RS-485
Ethernet LAN A	10/100 Mbit/s. Shielded RJ 45
Ethernet LAN B	N/A
USB-A	1 × USB Host 2.0, max output 500 mA
USB-B	N/A
External storage media	N/A
Flash memory (application memory)	2 GB
Memory RAM	512 MB (DDR3)
NVRAM	N/A
LED	N/A
Real time clock	Yes
Battery	Lithium battery type CR 2032, exchangeable
Power consumption at rated voltage	6.9 W
Fuse	Internal DC fuse, 3 AT, SMD
Power supply	+24 VDC (18-32 V DC) **CE:** The power supply must conform with the requirements according to EN/IEC 60950 and EN/IEC 61558-2-4. **UL and cUL:** The power supply must conform with the requirements for class 2 power supplies. Maximum Current 0.50 A. Maximum Power 9.6 W.
Display	10.1” TFT-LCD with LED backlight. 1024x600 pixels, 16.7M colors

Parameter	X2 base 10 v2
Active area of display, W×H	222.72x125.28 mm
Pixel errors	Class I (ISO 9241-307)
Backlight brightness	350 cd/m2
Backlight lifetime	30000 hours
Operating temperature	-10°C to +50°C
Storage temperature	-20°C to +60°C
Relative humidity in operation	5 - 90% non-condensed / 25°C
Vibration	1g, according to IEC 60068-2-6, Test Fc
Mechanical shock	10g, half-sine, 6ms according to IEC60068-2-27
Approvals and certifications	CE/FCC/KCC Information is available on www.beijerelectronics.com
UL approval	Information is available on www.beijerelectronics.com and UL.com

5. Chemical Resistance

5.1. Touch Screen and Overlay Material

5.1.1. Protective Film

The Autoflex protective film covers the overlay surrounding the screen.

Solvent Resistance

The protective film withstands exposure of more than 24 hours duration under DIN 42115 Part 2 to the following chemicals without visible change:

Acetonitrile	Diesel	Petroleum spirit[1]
Ajax / Vim in solution	Downy / Lenor[1]	Phosphoric acid (<30%)
Alkalicarbonate solution[1]	Ethanol	Potassium ferricyanide
Ammonia (<40%)[1]	Glycerine	Potassium hydroxide (<30%)
Acetic acid (<50%)	Glycol	Pure Turpentine
Ariel powder in solution[1]	Gumption[1]	SBP 60/95[1]
Bleach[1]	Hydrochloric acid (<36%)	Sulfuric acid (<10%)
Castor oil	Linseed oil	Tomato ketchup
Caustic soda (<40%)[1]	Methanol	Trichloroacetic acid (<50%)
Cutting oil	Nitric acid (<10%)	White Spirit
Cyclohexanol	Paraffin oil	Windex[1]
Diacetone alcohol	Persil powder in solution[1]	Wisk

[1]Extremely faint glossing of the texture was noted.

The Autoflex protective film withstands DIN 42 115 Part 2 exposure of up to 1 hour duration to glacial acetic acid without visible change.

The Autoflex protective film is not resistant to high pressure steam at over 100°C or the following chemicals:

Concentrated mineral acids	Benzyl alcohol
Concentrated caustic solution	Methylene chloride

5.1.2. Touch Screen Surface

The touch screen surface on the HMI panel withstands exposure to the following solvents without visible change:

Solvents	Time
Acetone	10 minutes
Isopropanol	10 minutes
Toluene	5 hours

The touch screen surface on the HMI panel is made of polyester with a hard coat to resist scratches and withstand exposure to many solvents without visible change.

5.1.3. Touch Screen Protector

For harsh environments and exposure to outdoor conditions, it is recommended to use a protective film to guard the touch screen from damage. This optional part can be ordered from Beijer Electronics.

6. HMI Panel Drawings

6.1. Connectors

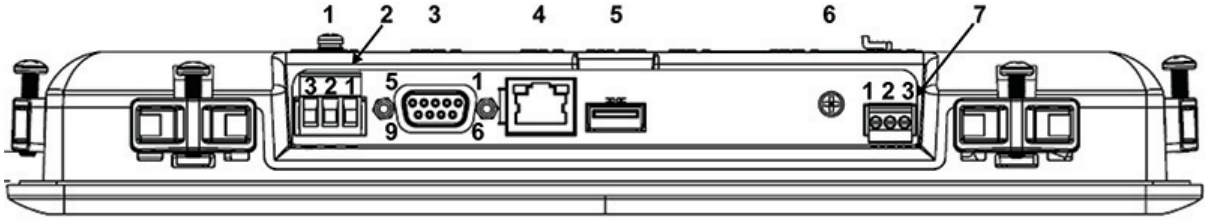

Pos	Connector	Description
1	Ground screw	Screw to connect functional ground
2	Power supply	3-pin screw connector, +24V DC (18-32V DC)
3	COM-A	DSUB (9-pin, female), serial communication port
4	LAN-A	RJ 45 (shielded), 10/100Mbit
5	USB-A	USB 2.0 Host, max output current 500mA
6	COM-C screw	Screw to connect COM-C cable shield
7	COM-C	3-pin screw connector

Power supply pin assignment	
Pos	**Description**
1	Vin+ (Main input supply voltage)
2	Vin- (Power ground)
3	FG (Frame Ground)

COM-A			
Serial port pin assignment			
Pin	**COM 1**	**COM 2**	**COM 3**
1		RS-422 TX+ or RS-485 Tx+/Rx+	
2	RS-232 RxD		
3	RS-232 TxD		
4		RS-422 RX+	RS-485 Tx+/Rx+
5	GND	GND	GND
6		RS-422 TX- or RS-485 Tx-/Rx-	
7	RS-232 RTS		
8	RS-232 CTS		
9		RS-422 RX-	RS-485 Tx+/Rx-

The connector supports up to three independent serial communication channels and can be configured for RS-232 and RS-422 or 2×RS-485.

COM-C	
Serial port pin assignment	
Pin	COM
1	GND
2	RS-485 Tx+/Rx+
3	RS-485 Tx-/Rx-

6.2. HMI Panel Outline

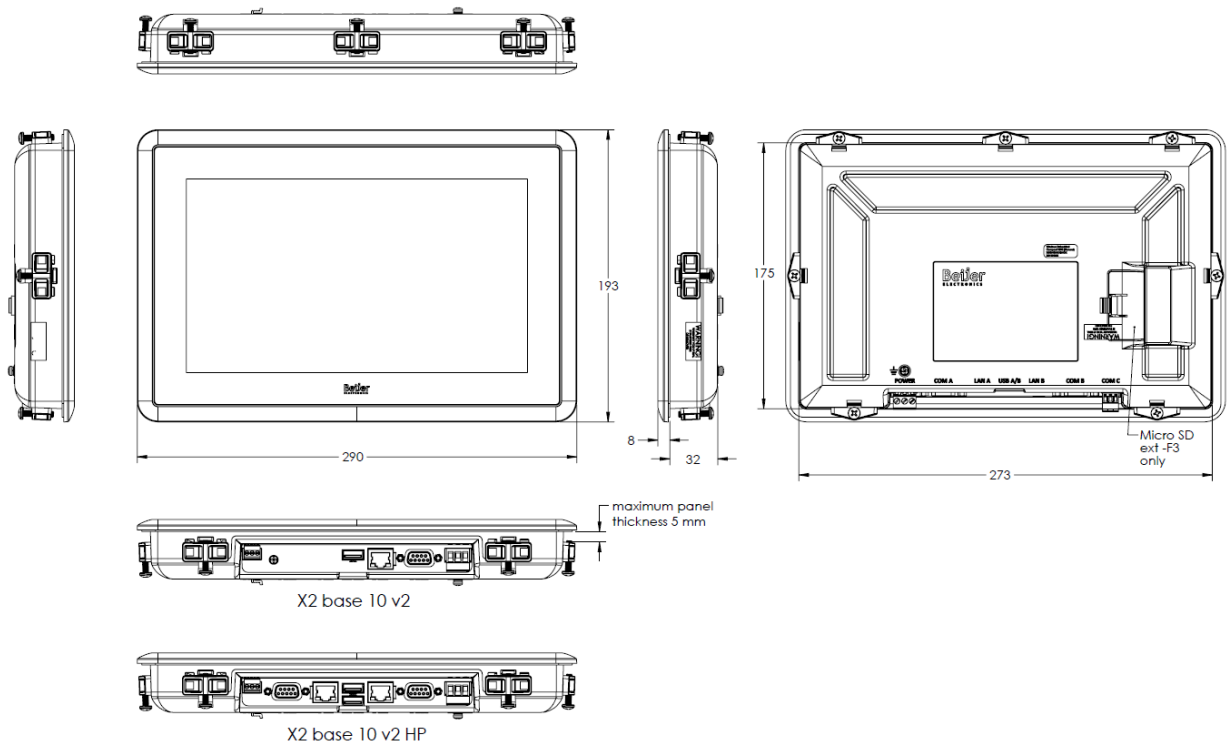

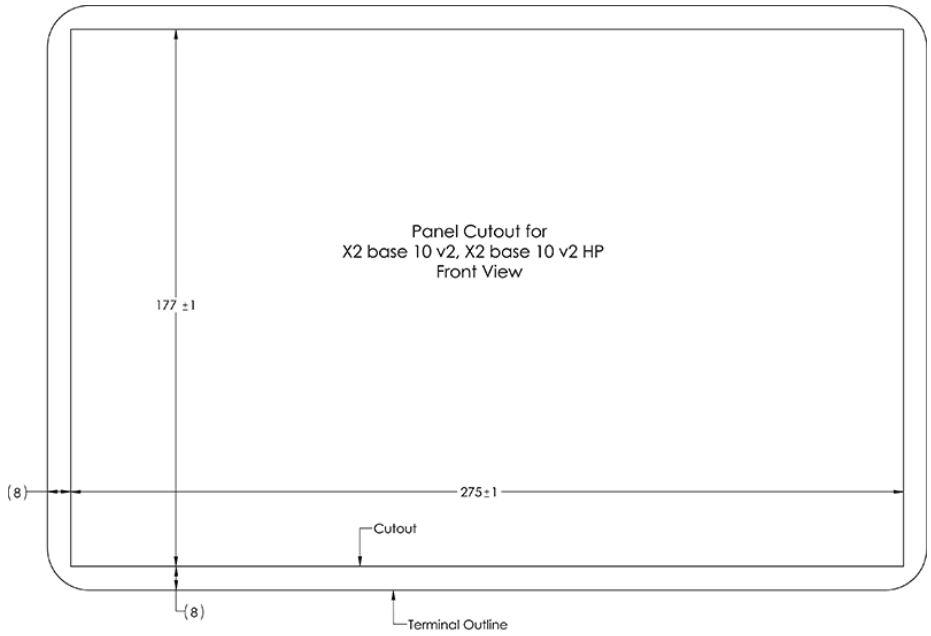

NOTE
Minimum thickness for the front plate is 2.0mm.

NOTE
A Step CAD file is available on www.beijerelectronics.com

7. Additional Installation Tips

When experiencing communication problems in noisy environments or when operating close to temperature limits, the following recommendations are to be noticed.

7.1. Grounding the HMI Panel

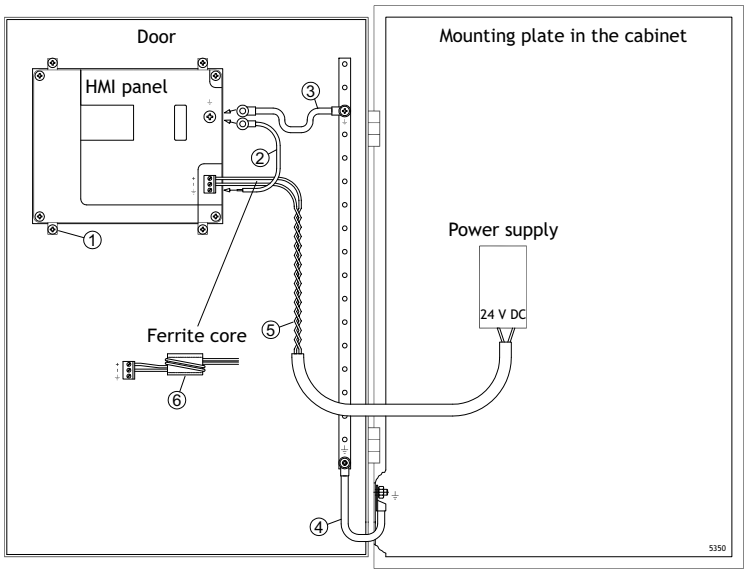

The mounting clamps of the HMI panel do not provide a secure grounding connection between the panel and the device cabinet, see **1** in drawing above. To ground the HMI panel:

1. Connect a wire, that is sized correctly according to local electrical codes, between the quick-connect terminal connector on the HMI panel and the chassis of the panel, see **2** in drawing above.
2. Connect a wire or grounding braid, that is sized correctly according to local electrical codes, between the chassis of the HMI panel and the closest grounding point on the door, see **3** in drawing above.
3. Connect a strong but short grounding braid between the door and the device cabinet, see **4** in drawing above.
4. Twist the cables onto the 24 V DC feed, see **5** in drawing above.
   - 2 turns around the ferrite core provide 4 times the suppression of 1 turn.
   - 3 turns around the ferrite core provide 9 times the suppression of 1 turn.

- Connect a wire or grounding braid, that is sized correctly according to local electrical codes, between the chassis of the HMI panel and the closest grounding point.

NOTE

The grounding wires should be short and the conductor should have a large area.

A long, thin grounding wire has a very high impedance (resistance) at high frequencies and does not guide disturbances to the ground.

Multi-wire conductors are better than single wire conductors with the same area.

A braided conductor wire with the same area is even better. The best is a short, thick grounding braid.

7.2. Ethernet Connection in the HMI Panel

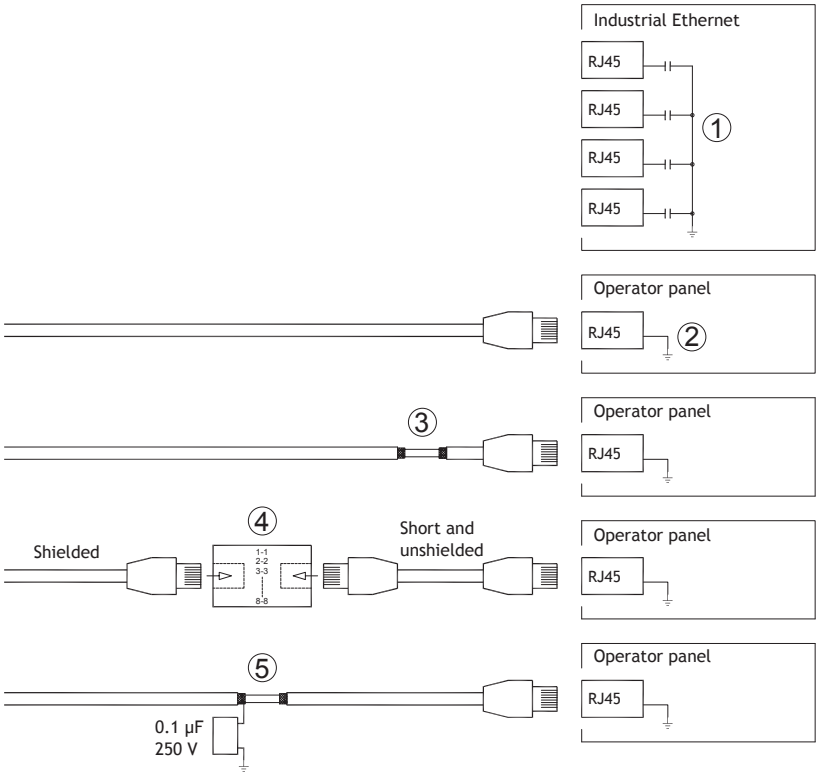

In some industrial units for Ethernet, the RJ45 contact's shield is connected to the chassis via a capacitor, see **1** in drawing above.

The Ethernet shield of the HMI panel is directly connected to the chassis, see **2** in drawing above.

Check whether the other Ethernet unit has its shield directly grounded or grounded via a capacitor.

NOTE

In many cases, connecting the shielded Ethernet cabling to the chassis at both ends is inappropriate. Humor grounding loops can occur. Unshielded cabling may even result in fewer communication errors.

A good solution may be to use a shielded Ethernet cable, but to connect the shield at one end only.

One option is to break the shield, see **3** in drawing above.

A more elegant method is to expand the shielded Ethernet cabling with a piece of unshielded Ethernet cable, see **4** in drawing above.

The shield can be grounded via an external 0.1 µF/250 V film capacitor, see **5** in drawing above. This connects the HF transients to ground.

7.3. To Achieve Better EMC Protection

- Initially, use the original cabling from Beijer Electronics primarily.
- Place the 24 V DC and communications cabling in one cable trunk/cable duct and 230/380 V AC in another. If the cables need to be crossed, cross them at 90° only. Avoid combining the cabling for stronger 24 V DC outputs with the communication cabling.
- Use shielded cables for RS-232 communication.
- Use twisted pair and shielded cabling for RS-422 and RS-485.
- Use the cabling intended for the bus type; Ethernet, Profibus, CC-Link, CAN, Device Net etc.
- Install and connect according to applicable specifications for the relevant bus standard.
- Use shielded cabling for Ethernet, preferably with foil and a braided shield.
- D-sub covers should be shielded, and the shield should be connected to the cover 360° where the cable enters.
- Connect the shield at both ends.

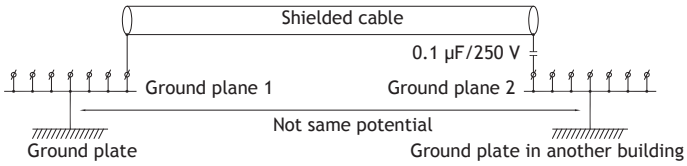

With longer distances, there is a risk that the ground potential may be different. In that case, the shield should only be connected at one end. A good alternative is to connect the other end of the shield to the ground via a 0.1 µF / 250 V film capacitor. Both ends are then connected to the ground in terms of HF, but only connected to the ground at one end in terms of LF, thus avoiding the 50/60 Hz grounding loops.

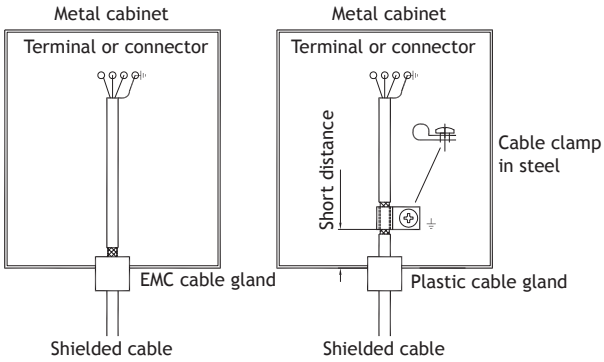

1. Use an EMC cable gland or regular plastic cable gland, remove the outer jacket and connect the shield to the installation plate with a 360° metal cable clamp.
2. Place the 24 V DC and communications cabling in one cable trunk/cable duct and 230/380 V AC in another. If the cables need to be crossed, cross them at 90° only. Avoid combining the cabling for stronger 24 V DC outputs with the communication cabling.

NOTE

Ferrite cores that are snapped onto the shielded cabling may remove minor disturbances. Large ferrite pieces that are snapped onto unshielded cabling and where the wires go 2-4 times around the cores are approximately 5-25 times more efficient.

7.4. Ambient Temperature

The maximum ambient temperature for the HMI panel is provided in the specifications. The ambient temperature refers to the temperature in the device cabinet which cools the HMI panel's electronics.

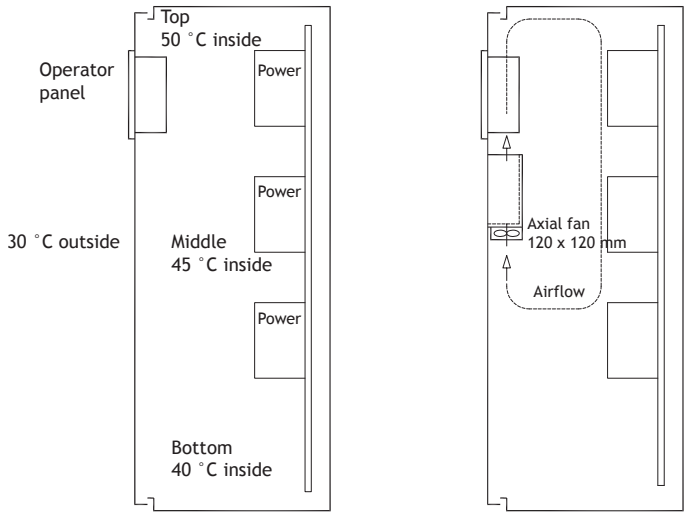

In most cases, the ambient temperature for the HMI panel is significantly higher than the device cabinet’s ambient temperature.

If the cabinet is tall and there are a number of heat-generating devices, the temperature at the top of the cabinet is considerably higher than the temperature increase that would be expected. All electronics are sensitive to heat. The lifespan of an electrolytic capacitor is cut in half with an 8-10 °C increase in temperature. A 15-20 °C temperature increase results in a quarter of the lifespan etc.

Rittal has a good program for estimating the anticipated average temperature in the cabinet as well as a large program for controlling the temperature in the device cabinet.

An enamel-coated steel cabinet has a radiant heat value of 5.5 W/m^2 per °C.

Installing a fan inside the cabinet evens out the temperature, while moving air provides considerably better cooling than still air.

Install the fan so that it sits in a cooler area and blows cold air against the HMI panel. If the fan is mounted at the top and sucks warm air upwards, the ambient temperature of the fan becomes higher, resulting in a shorter lifespan.

An approximate value of the net power consumption for the HMI panel can be calculated by multiplying the supply voltage with the current drawn by the HMI panel. This is assuming that all supplied power is transformed to heat.

NOTE

Please ensure that the temperature will not exceed the maximum ambient operating temperature in the enclosure. This can be influenced by other heat generating devices.

7.5. Safety

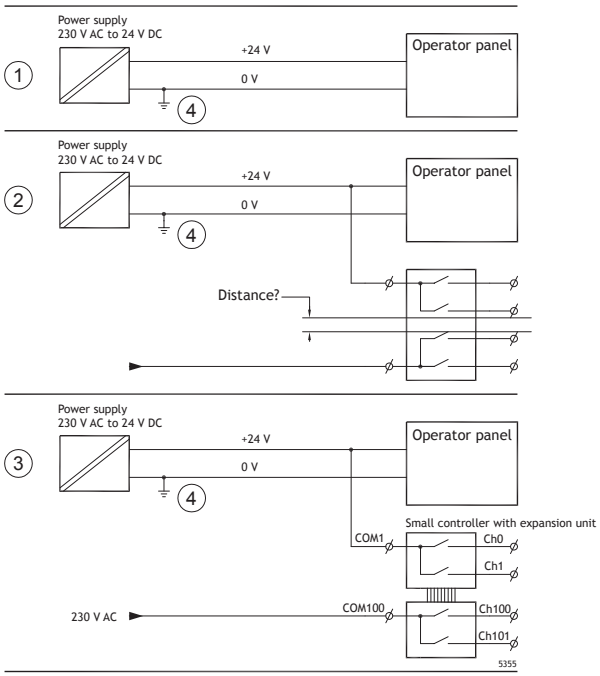

If a power supply that meets safety standards is used and only powers the HMI panel, there is no problem. See **1** in drawing above.

However, if a 24 V unit that also powers other units is used, there is reason to be cautious, see **2** in drawing above. The HMI panel does not have insulation that meets safety requirements in the event of a potential short circuit between 230 V AC and 24 V DC. It is assumed that the 24 V power supply is secure, for example, SELV according to EN 60950 (protection against electric shock) and UL 950.

NOTE

Here is an example that explains why a secure 24 V DC power supply can be ruined by mixing 24 V relay contacts with 230 V AC relay contacts in a smaller controller. Check that the clearances and creepage distances between 24 V DC and 230 V AC fulfill EN 60950 or UL 950. If not, input a separate 24 V unit into the HMI panel.

If there is a substantial distance between the relay contacts for 24 V DC and 230 V AC, it is OK to use the same 24 V devices for all feeds. See **3** in drawing above.

Connect 0 V on the 24 V power supply to the ground, see **4** in drawing above. This offers three advantages:

- Safety is increased. The 24 V power supply is not live in the event of a faulty connection or short circuit between 0 V (24 V) and 230 V phase.
- Transients on the 24 V feed are connected to the ground.

- No risk that the 24 V feed is at a high level in relationship to the ground. This is not unusual since there is high static electricity.

7.6. Galvanic Isolation

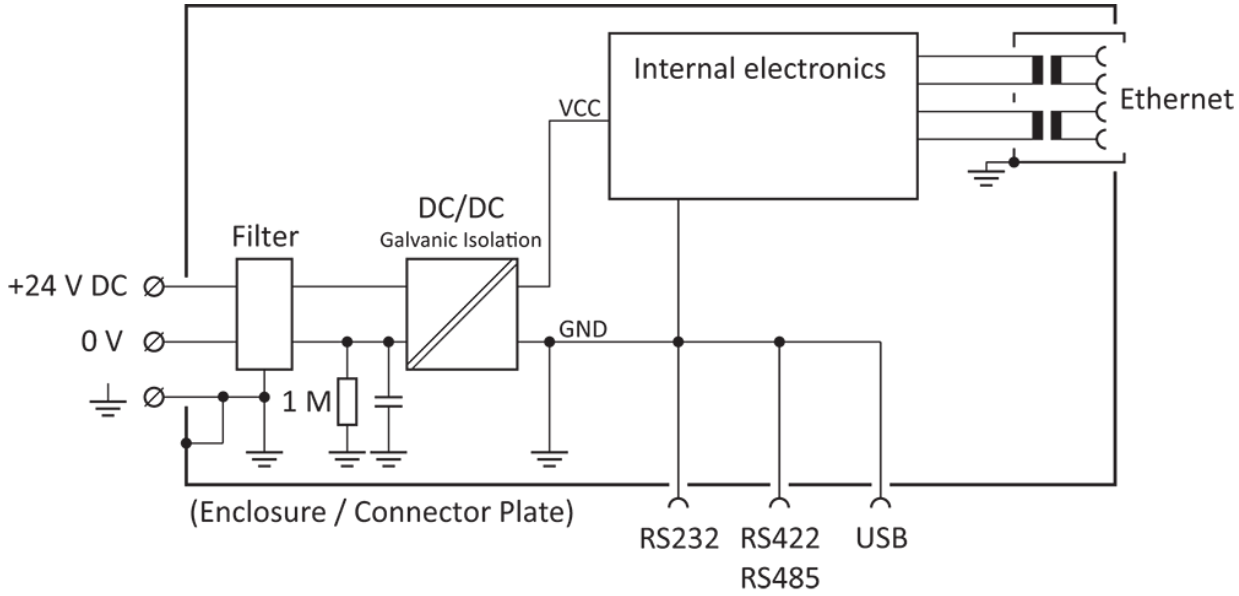

The HMI panel has galvanic isolation against the 24 V DC power supply but no galvanic isolation between the communication ports for RS-232, RS-422, RS-485 and USB. Only the Ethernet connection has galvanic isolation.

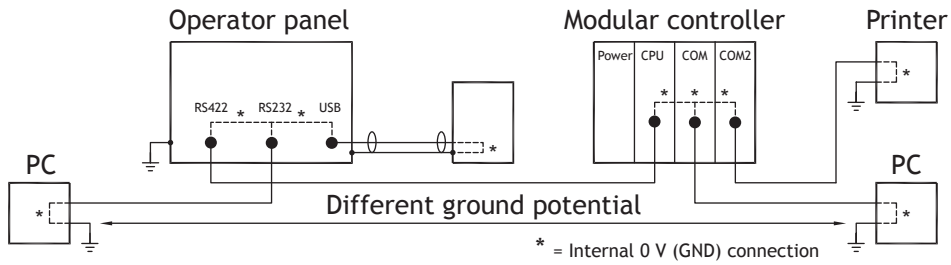

When a PC is connected to the HMI panel, the internal 0 V (GND) of the panel is connected to the protective ground via the PC.

A number of USB devices can have the shield connected together with the protective ground. Here, the 0 V (GND) of the HMI panel is connected to the protective ground when, for example, a USB memory stick, keyboard, or similar device is plugged in.

If a number of units are connected that have a 0 V and a ground connection, and these are connected to various grounding points, there is a substantial risk of problems. Grounding currents go through communication cables, the rear plate of the controller, internally in the HMI panel, and can cause errors.

Use external units to improve communication and achieve galvanic isolation. Westermo has good industry-standard insulators that are also insulated from the 24 V DC feed.

NOTE

It is very important to make sure that the 24 V feed in the external insulation unit is not connected to one of the communication outlets. If it does not have 100% insulation against the 24 V feed, disturbances and grounding currents from the 0 V on the 24 V side disrupt the communication.

Using this type of unit solves one problem but creates a larger problem! A substandard installation may work now, but problems may arise when other devices are connected.

7.7. Cable and Bus Termination RS-485

- If maximum transfer distance and maximum transfer speed is needed, shielded and twisted pair cable should be used. The mutual capacitance may not exceed 52.5 pF/m, and the cable area should be at least 0.25 mm^2 (AWG 24).
- 0 V, the reference voltage for communication should be included in the cabling. With two-way communication use two pairs; one pair for communication and one pair for 0 V.
- The shield must be grounded at one end. The other end is usually grounded, but with longer distances or when there is a difference in the ground potential, the shield should be connected to the ground via 0.1 µF / 250 V film capacitor to prevent ground current in the braided shield. Some manufacturers recommend that the shield be grounded at each node. Various manufacturers have different systems for bus termination.

Depending on the recipients' design, the bus wires may be on the same level or require pull-up or pull-down to ensure that no faulty signals are detected when the bus is in resting mode (all transmitters are disconnected).

7.8. USB Flash Drive

The USB port, or ports, are of 2.0 standard and support FAT16, FAT32 and exFAT file systems for USB flash drives (option, sold separately).

Size limitations for file systems:

- FAT16: up to 2 GB
- FAT32: up to 32 GB
- exFAT: up to 2 TB

7.9. Image Sticking

When utilizing TFT LCD HMI panels in applications where a fixed or partially fixed image remains displayed on the screen for extended periods of time, users may experience a phenomenon referred to by the LCD industry as Image Sticking. Image sticking, sometimes also called "image retention" or "ghosting", is a phenomenon where a faint outline of a previously displayed image remains visible on the screen when the image is changed.

Image sticking can be caused by:

- Static images
- No screensaver
- Sharp contrast transition (e.g. black/white)
- High ambient temperatures

How Image sticking can be avoided or reduced:

- Use the screensaver functionality (see SW manual).
- Changing constantly between static and dynamic images.
- Avoid excessive brightness differences between foreground and background elements.
- Use colors with similar brightness.
- Use complementary colors in follow-up images.