Hardware and Installation Manual

X2 control 12 - B2

MAEN223
2026-01

Beijer ELECTRONICS
People & Technology. Connected.

Foreword

All HMI panels are developed to satisfy the demands of human-machine communication. Built-in functions such as displaying and controlling text, dynamic indication, time channels, alarm and recipe handling are included. The HMI panel works primarily in an object-oriented way, making it easy to understand and use. Configuration is carried out on a PC using iX Developer software. The project can then be transferred and stored in the HMI panel itself. Various types of automation equipment such as PLCs, servos or drives can be connected to the HMI panels. In this manual, the term “the controller” refers to the connected equipment. This manual explains how to install the HMI panel. Please refer to the iX Developer reference manual for further information.

Copyright © 2025 Beijer Electronics AB. All rights reserved.

The information in this document is subject to change without notice and is provided as available at the time of publishing. Beijer Electronics AB, including all its group companies, reserves the right to change any information without updating this publication. Beijer Electronics AB, including all its group companies, assumes no responsibility for any errors that may appear in this document. Read the entire document prior to installing and using this equipment. Only qualified personnel may install, operate or repair this equipment. Beijer Electronics AB, including all its group companies, are not responsible for modified, altered or renovated equipment. Because the equipment has a wide range of applications, users must acquire the appropriate knowledge to use the equipment properly in their specific applications. Persons responsible for the application and the equipment must themselves ensure that each application is in compliance with all relevant requirements, standards and legislation in respect to configuration and safety. Only parts and accessories manufactured according to specifications set by Beijer Electronics AB, including all its group companies, may be used.

BEIJER ELECTRONICS AB, INCLUDING ALL ITS GROUP COMPANIES, SHALL NOT BE LIABLE TO ANYONE FOR ANY DIRECT, INDIRECT, SPECIAL, INCIDENTAL OR CONSEQUENTIAL DAMAGES RESULTING FROM THE INSTALLATION, USE OR REPAIR OF THIS EQUIPMENT, WHETHER ARISING IN TORT, CONTRACT, OR OTHERWISE. BUYER'S SOLE REMEDY SHALL BE THE REPAIR, REPLACEMENT, OR REFUND OF PURCHASE PRICE, AND THE CHOICE OF THE APPLICABLE REMEDY SHALL BE AT THE SOLE DISCRETION OF BEIJER ELECTRONICS AB, INCLUDING ALL ITS GROUP COMPANIES.

Head Office
Beijer Electronics AB
Box 426
201 24 Malmö, Sweden
www.beijerelectronics.com / +46 40 358600

Table of Contents

1. Safety Precautions 5
    1.1. General 5
    1.2. Hazardous Materials 5
    1.3. Disposal Requirements Under WEEE Regulations 6
    1.4. UL and cUL Installation 6
    1.5. During Installation 7
    1.6. During Use 7
    1.7. Service and Maintenance 7
        1.7.1. Cleaning the Display 8
    1.8. Dismantling and Disposal 9
    1.9. Air Bubbles in Touch Screen 9
2. Naming Convention 10
3. Installation 11
    3.1. Space Requirements 11
    3.2. Installation Process 11
        3.2.1. Connections to the Controller 13
        3.2.2. Other Connections and Peripherals 13
4. Technical Data 14
    4.1. Compass Safe Distance 15
5. Chemical Resistance 16
    5.1. Metal Casing 16
    5.2. Touch Screen and Overlay Material 16
        5.2.1. Protective Film 16
        5.2.2. Touch Screen Surface 17
        5.2.3. Touch Screen Protector 17
6. HMI Panel Drawings 18
    6.1. Connectors 18
        6.1.1. Communication Ports 18
        6.1.2. Digital Outputs 19
    6.2. HMI Panel Outline 20
7. Additional Installation Tips 22
    7.1. Grounding the HMI Panel 22
    7.2. Ethernet Connection in the HMI Panel 23
    7.3. To Achieve Better EMC Protection 24
    7.4. Ambient Temperature 25
    7.5. Safety 26
    7.6. Galvanic Isolation 27
    7.7. Cable and Bus Termination RS-485 28
    7.8. CAN Interface 28
        7.8.1. Cable Recommendations 28
        7.8.2. Termination 28
        7.8.3. Restrictions and Recommendations 29
    7.9. USB Flash Drive 29
    7.10. Image Sticking 29

1. Safety Precautions

Both the installer and users of the HMI panel must read and understand this manual.

1.1. General

- Read all safety precautions carefully.
- Check the delivery for transportation damage. If damage is found, notify the supplier as soon as possible.
- Do not use the HMI panel in an environment with high explosive hazards.
- The supplier is not responsible for modified, altered, or reconstructed equipment.
- Use only parts and accessories manufactured according to specifications from the supplier.
- Read the installation and operating instructions carefully before installing, using or repairing the HMI panel.
- Never allow fluids, metal filings or wiring debris to enter any openings in the HMI panel. This may cause fire or electrical shock.
- Only qualified personnel may operate the HMI panel.
- Storing the HMI panel where the temperature is lower or higher than recommended in this manual can cause the LCD display liquid to congeal and become isotropic.
- The LCD display liquid contains a powerful irritant. In case of skin contact, wash immediately with plenty of water. In case of eye contact, hold the eye open, flush with plenty of water and get medical attention.
- The images in this manual serve an illustrative purpose. Because of the many variables associated with any particular installation, the supplier cannot assume responsibility for actual use based on the images.
- The supplier does not provide a guarantee that the HMI panel is suitable for any specific application, and also disclaims responsibility for product design, installation, or operation.
- Power on and power off the HMI panel at least once before installing any new components or connecting it to external devices (e.g., serial devices).
- For Marine panels only:
  - The HMI panel must be installed and operated as described in this document to meet this certification.
  - Observe precautions for handling electrostatic discharge sensitive devices.

1.2. Hazardous Materials

Part description 零件描述	Toxic and hazardous materials or elements 有毒和有害的材料或元素					
PCB and electronic components	Pb	Hg	Cd	Cr6+	PBB	PBDE
PCB 和电子元件	X	O	O	O	O	O

O: Indicates that the concentration of the hazardous substance in all homogeneous materials in the parts is below the relevant threshold of the GB/T 26572-2011 standard.

O: 表示该有害物质在该部件所有均质材料中的含量均在 GB/T 26572-2011 规定的限 量要求以下。

X: Indicates that the concentration of the hazardous substance of at least one of all homogeneous materials in the parts is above the relevant threshold of the GB/T 26572-2011 standard. But still complies with the EU RoHS Directive 2011/65/EU.

X: 表明该有害物质至少在部件的某一均质材料中的含量超出 GB/T 26572-2011 规定 的限量要求。但仍然符合 EU RoHS 指令 2011/65/EU。

1.3. Disposal Requirements Under WEEE Regulations

For professional users in the European Union: If you wish to discard electrical and electronic equipment (EEE), please contact your dealer or supplier for further information.

For disposal in countries outside of the European Union: If you wish to discard this product please contact your local authorities or dealer and ask for the correct method of disposal.

1.4. UL and cUL Installation

CAUTION

This section is only valid for UL labeled X2 panels.

- This equipment is suitable for use in Class 2 non-hazardous locations only.
  [Combinations of equipment in your system are subject to investigation by the local authority having jurisdiction at the time of installation].
- All devices have to be supplied by a Class 2 power supply.

WARNING

- Only UL and cUL approved expansion units are allowed to be connected to the port designated “EXPANSION”. At the moment there are no such units evaluated or allowed.
  SEULES LES UNITÉS D'EXTENSION CERTIFIÉES UL ET cUL PEUVENT ÊTRE RACCORDÉES AU PORT DÉSIGNÉ «EXPANSION». À L'HEURE ACTUELLE, AUCUNE UNITÉ DE CE TYPE N'A ÉTÉ TESTÉE OU AUTORISÉE.
- Explosion hazard! Substitution of components may impair suitability for Class I, Division 2.
  RISQUE D’EXPLOSION! LA SUBSTITUTION DE COMPOSANTS PEUT NUIRE Á LA CONFORMITÉ DE CLASSE I, DIVISION 2.
- Battery may explode if mistreated. Do not recharge, disassemble or dispose of in fire.
  LA BATTERIE PEUT EXPLOSER EN CAS DE MAUVAISE MANIPULATION. NE LA RECHARGEZ PAS, NE LA DÉMONTEZ PAS ET NE LA JETEZ PAS DANS LE FEU.

- This product contains a battery; this must only be changed in an area known to be non-hazardous.
- Replace the battery with a BR2032 battery. Use of another type of battery may present a risk of fire or explosion.
- For use on a flat surface of a type 4X enclosure indoor use only.
- Use minimum 75°C copper conductors only.
- To make wiring connections to the power supply connector, follow the table with cable and torque specifications below:

Terminal Block Connector	Wire Size AWG	Torque (Lb.In.)
X1/X100 Phoenix connectors	AWG 30 – 12	5 – 7
X1/X100 Anytek connectors	AWG 24 – 12	3.5
X1/X100 DECA connectors	AWG 24 – 12	7

- These devices are Class 2 supplied programmable controllers (industrial PCs) for the use in industrial control equipment and are intended to be (front) panel mounted (Type 12 and 4x for indoor use only).

CAUTION

The enclosure provides a degree of protection of at least IP20, but when installed in an apparatus, it should meet IP65.

LE BOÎTIER OFFRE UN DEGRÉ DE PROTECTION D'AU MOINS IP20, MAIS LORSQU'IL EST INSTALLÉ DANS UN APPAREIL, IL DOIT ÊTRE DE CLASSE IP65.

1.5. During Installation

- The operator panel is designed for stationary installation on a planar surface, where the following conditions are fulfilled:
  - no high explosive risks
  - no strong magnetic fields
  - no direct sunlight
  - no large, sudden temperature changes
- Install the HMI panel according to the accompanying installation instructions.
- Ground the HMI panel according to the accompanying installation instructions.
- Only qualified personnel may install the HMI panel.
- Separate the high voltage, signal, and supply cables.
- Make sure that the voltage and polarity of the power source is correct before connecting the HMI panel to the power outlet.
- Peripheral equipment must be appropriate for the application and location.

1.6. During Use

- Keep the HMI panel clean.
- Emergency stop and other safety functions may not be controlled from the HMI panel.
- Do not use excessive force or sharp objects when operating the touch screen.

1.7. Service and Maintenance

- Repairs must be performed by qualified personnel only.
- The agreed warranty applies.
- Before carrying out any cleaning or maintenance operations, disconnect the equipment from the electrical supply.
- Clean the display and surrounding front cover with a soft cloth and mild detergent.
- The battery must be replaced by an authorized Beijer Electronics service center.

WARNING

On versions with Codesys runtime included, do not replace the battery before a backup of the Codesys retain variables and content has been made!

For more information contact our local support team or look in help online.

1.7.1. Cleaning the Display

We recommend using a dry, clean cloth to wipe off dust regularly. Use alcohol or ammonia-based cleaning agent for cleaning only when necessary. When other solvents or cleaning agents are used, be sure to follow manufacturers' instructions. The agent should be applied to a clean cloth and should not be sprayed directly onto the panel surface. After cleaning the agent should be removed. Ammonia-based glass cleaners (typically 5-10% ammonia) or 75% alcohol can be used to clean the surface of PCAP and resistive touch panels. When you clean the surface of your touch panel, please follow these steps:

1. Apply cleaning agent (alcohol, bleach, or glass cleaner) to a clean cloth.
   Make sure the cloth is well saturated.
2. Wipe the touch panel surface in a "Z" motion (see illustration below).
3. Dry the panel thoroughly with a dry cloth, removing as much of the cleaning solution as possible.
4. Do not mix bleach and ammonia because this will produce a dangerous chemical reaction.
5. Please do not spray cleaning solution directly onto the touch panel surface.

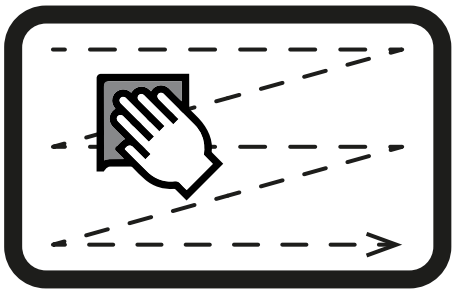

NOTE

- Cleaning solutions containing bleach, alcohol, and ammonia are corrosive to touch panel surface coatings and ITO film. Do not leave the solution on the touch panel surface for more than 2 minutes. Make sure to remove all residue when finished cleaning.
- Do not use sharp tools to clean the surface of the touch screen.
- Do not use air guns, water jets, or steam, to clean the surface of the touch screen as they may damage touch screen functionality.
- If condiments, food, or drinks are spilled on the surface of the touchscreen, please remove it immediately.
- Ensure moisture does not seep through the cable connection area from the edges during cleaning.

1.8. Dismantling and Disposal

- Recycle the HMI panel and parts of it according to local regulations.
- The following components contain substances that might be hazardous to health and the environment: lithium battery, electrolytic capacitor, and display.

1.9. Air Bubbles in Touch Screen

The layer structure of the touch screen contains air. In rare cases, the appearance of bubbles can arise. This is purely cosmetic and does not affect the functionality of the HMI panel. The appearance can occur under certain environmental conditions such as changes in temperature, humidity, or atmospheric pressure.

2. Naming Convention

The name of each panel is based on its properties according to the table below.

Naming Convention

X2 family	Size (inches)	Generation/Version	Variant	
base	4	v2	SC	Soft Control
pro	5		SM	Soft Motion
marine (= with BL)	7		HB	High Brightness
control (= with SC)	10		HP	High Performance
motion (= with SM)	12		BL	Black
extreme	15		12V	12 Volt
	21		SL	Sealed
			RO	Rugged Only
			CO	Certification Only
			web	Web

Examples:

- X2 base 5 v2
- X2 pro 7
- X2 control 10
- X2 marine 12 SC
- X2 marine 15 HB SC
- X2 extreme 7 12V*
- X2 extreme 12 HP SC*
- X2 extreme 7 SL HP*
- X2 extreme 12 SL HP SC*
- X2 extreme 7 CO*
- X2 extreme 12 SL HP RO

NOTE
Not all combinations are available.

NOTE
* indicates variants including IECEx\ATEX and C1D2 accreditation.

3. Installation

3.1. Space Requirements

- Maximum installation plate thickness: 8 mm.

The following drawings show the space requirements in millimeters when installing the HMI panel. The drawings are only illustrative and may be out of proportion.

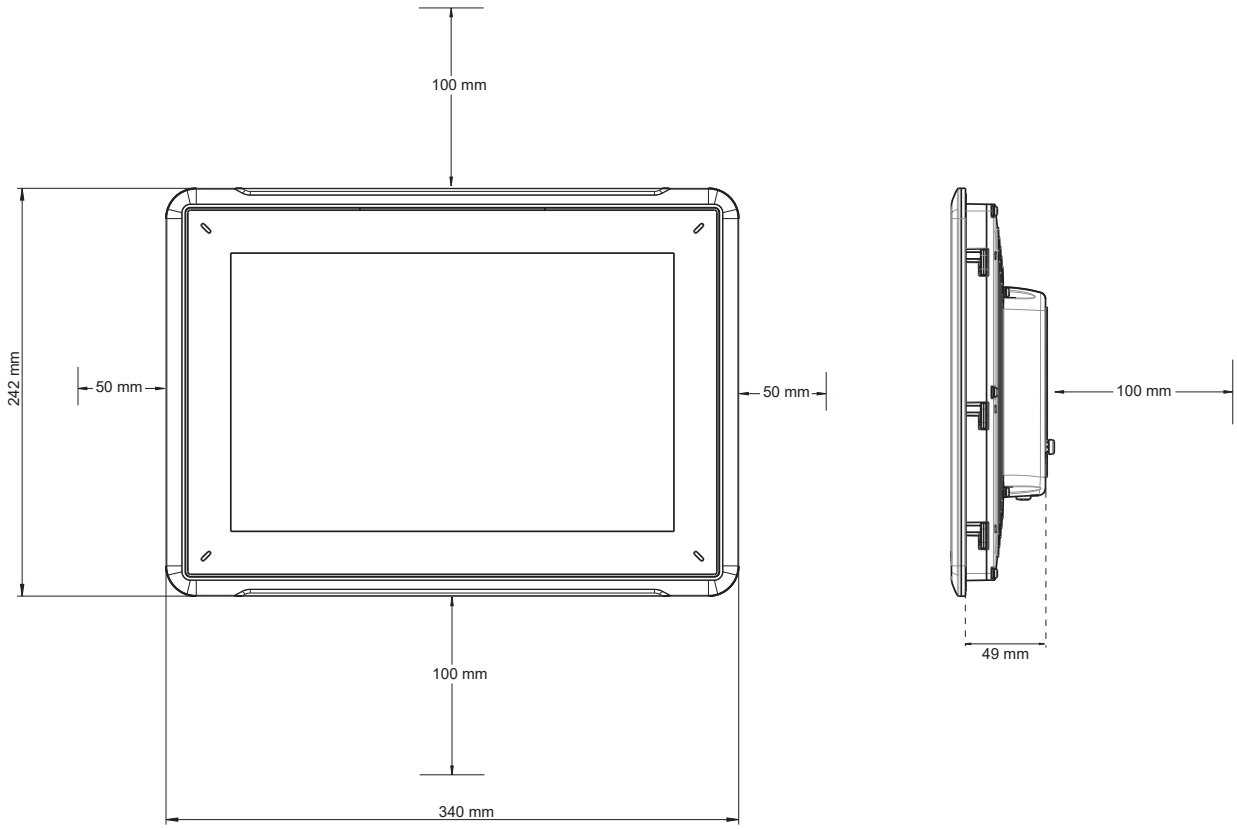

3.2. Installation Process

The following is needed:

- A Phillips/slot screwdriver

Do the following:

1. Unpack and check the delivery. If damage is found, notify the supplier.

> **NOTE**
> Place the HMI panel on a stable surface during installation. Dropping the HMI panel or letting it fall may cause damage.

2. To cut a correct opening for the HMI panel, use the cut out dimensions in the outline drawing. A separate cut out drawing is available for download from the Beijer Electronics web site. For more information, see chapters *HMI Panel Drawings* and *Technical Data*.

3. Make sure that the mounting surface of the cutout is smooth and cleaned from any burrs or debris.
4. Install the HMI panel into the cutout.
5. Secure the HMI panel in position by screwing the slotted thumb screw clockwise, allowing the built-in bracket to flip out and tighten against the cabinet as shown.

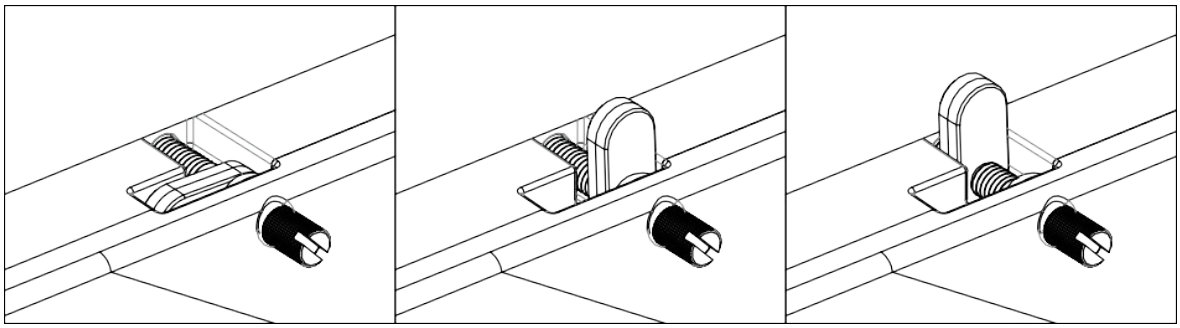

Tighten the screws to 0.7 ± 0.2 Nm.

6. In cases where the front panel seal (IP54 or greater, NEMA-4X) is critical, use a torque wrench to ensure all screws are torqued within the specification above.
7. Connect the cables in the specified order, according to the following drawing and steps.

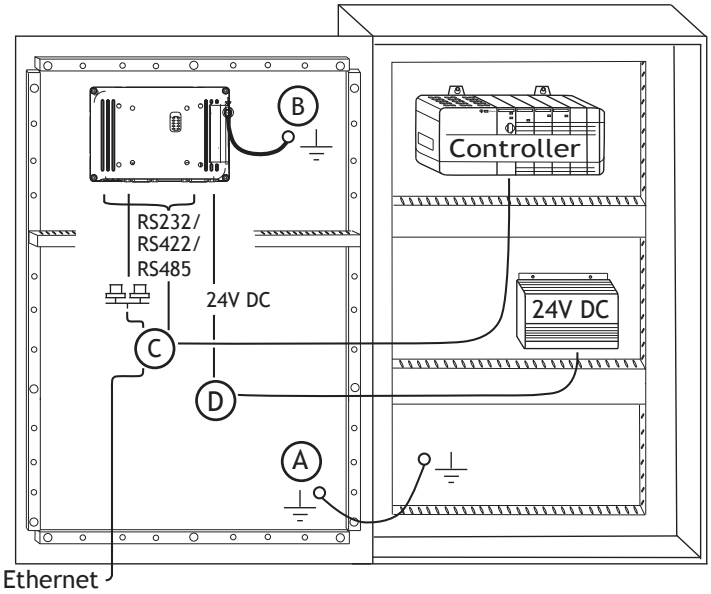

The image is illustrative only and may differ slightly from the actual panel.

- Connect cable A.
- Connect cable B, using 14-20 AWG (2.08–0.52 mm^2), 180–220 N-cm torque.
- Connect cable C.
- Connect cable D. The recommended cross-section of the cable is 1.5 mm^2.

8. Peel off the protective film covering the HMI panel display, ensuring caution to prevent any static electricity that may potentially damage the panel.

CAUTION

- In case of condensation, ensure the HMI panel is dry before connecting it to the power outlet.
- Ensure that the HMI panel and the controller system have the same electrical grounding (reference voltage level), otherwise errors in communication may occur.
- Ensure that the voltage and polarity of the power source is correct.
- Separate high voltage cables from signal and supply cables.
- Shielded communication cables are recommended.

3.2.1. Connections to the Controller

For information about the cables to be used when connecting the HMI panel to the controller, please refer to the help file for the driver in question.

3.2.2. Other Connections and Peripherals

Ensure that cables, peripheral equipment, and accessories are appropriate for the application and its environment. For additional details or recommendations, consult the supplier.

4. Technical Data

Parameter	X2 control 12 - B2
Front panel, W×H×D	340 × 242 × 8 mm
Cutout dimensions, W×H	324 × 226 mm
Mounting depth	49 mm (149 mm including clearance)
Standalone mounting	VESA 75 × 75 Note: Maximum screw length for VESA mounting is 4 mm. Usage of longer screws may lead to damage.
Front panel seal	IP 65
Rear panel seal	IP 20
Touch screen material	Polyester on glass, ITO film, resistive
Frame overlay	Autoflex EBA 180L
Touch screen operations	1 million finger touch operations
Reverse side material	Powder-coated aluminum
Frame material	Powder-coated aluminum
Weight	2.6 kg
CPU	i.MX6 Quad Quad ARM Cortex-A9 Core 1.0GHz 1 MB L2 cache
Serial ports	StandardD-sub (9 Pin, female) COM1: RS-232 with RTS/CTS COM2: RS-422/RS-485 COM3: RS-485 1×RS-232 Rx/Tx with RTS/CTS and 1×RS-422 or 2×RS-485 .
Ethernet LAN A	10/100 Mbit Base-T (shielded RJ45 with LEDs)
Ethernet LAN B	10/100 Mbit Base-T (shielded RJ45 with LEDs)
USB	2 × USB Host 2.0, max output current 500 mA Supports up to USB 2.0 High Speed
DIO (outputs, potential free)	Yes Opto-MOS relay, 2x SPST. Normally open.
External storage media	1 × SD card
Flash memory (application memory)	2 GB SSD (eMMC), 1.5 GB free for application
Memory RAM	2 GB (DDR3)
NVRAM	128 kB
LED	1 × Multi color
Real time clock	Yes

Parameter	X2 control 12 - B2
Battery	BR 2032 lithium battery replaceable
Power consumption at rated voltage	28.8 W
Fuse	Internal DC fuse, 4 AT, 5 × 20 mm
Power supply	+24 VDC (18-32 V DC) **CE:** The power supply must conform with the requirements according to EN/IEC 60950 and EN/IEC 61558-2-4. **UL and cUL:** The power supply must conform with the requirements for class 2 power supplies.
Display	TFT-LCD with LED backlight 1280 × 800 pixels, 262k colors
Active area of display	12.1” diagonal
Pixel errors	Class I (ISO 9241-307)
Backlight brightness	400 Cd/m2
Backlight lifetime	50,000 hours
Operating temperature	-10°C to +60°C
Storage temperature	-20°C to +70°C
Relative humidity in operation	5 - 85% non-condensation
Vibration	1g, according to IEC 60068-2-6, Test Fc
Mechanical shock	15g, half-sine, 11ms according to IEC60068-2-27
Approvals and certifications	CE/FCC/KCC Information is available on www.beijerelectronics.com
UL approval	Information is available on www.beijerelectronics.com and UL.com
Marine certificates	Information is available on www.beijerelectronics.com

4.1. Compass Safe Distance

Variant	Condition	Standard Compass	Steering Compass
X2 control 12	Non-energized	95 cm	85 cm
	Non-energized after magnetization	95 cm	85 cm
	Energized and operating	95 cm	85 cm

5. Chemical Resistance

5.1. Metal Casing

The frame and casing material is powder-coated aluminum. This powder paint withstands exposure to the following chemicals without visible change:

Acetic acid 10%	Phosphoric acid 4%
Citric acid 10%	Phosphoric acid 10%
Diesel	Sea water
Distilled water	Sodium chloride 2%
Edible oil	Sodium chloride 20%
Fuel oil	Sulphuric acid 20%
Hydrogen peroxide 3%	Tap water

The powder paint shows limited resistance to the following chemicals at room temperature:

Butanol	Nitric acid 3%
Hydrochloric acid 5%	Nitric acid 10%
Isopropyl alcohol	Phosphoric acid 43%
Sodiumhypochlorite 10%	Turpentine

NOTE
If exposure to any of the above chemicals is demanded, it is recommended to first test the chemical in a hidden spot of the metal casing.

The powder paint shows little or no resistance to the following chemicals at room temperature:

Acetic acid, conc.	Methyl-ethyl ketone	Toluene
Acetone	Nitric acid 30%	Trichlorethylene
Ammonia 5%	Phenol	Xylene
Ammonia, conc.	Sodium hydroxide 5%	97 octane unleaded petrol
Ethyl acetate	Sodium hydroxide 30%	98 octane leaded petrol

5.2. Touch Screen and Overlay Material

5.2.1. Protective Film

The Autoflex protective film covers the overlay surrounding the screen.

Solvent Resistance

The protective film withstands exposure of more than 24 hours duration under DIN 42115 Part 2 to the following chemicals without visible change:

Acetonitrile	Diesel	Petroleum spirit[1]

Ajax / Vim in solution	Downy / Lenor[1]	Phosphoric acid (<30%)
Alkalicarbonate solution[1]	Ethanol	Potassium ferricyanide
Ammonia (<40%)[1]	Glycerine	Potassium hydroxide (<30%)
Acetic acid (<50%)	Glycol	Pure Turpentine
Ariel powder in solution[1]	Gumption[1]	SBP 60/95[1]
Bleach[1]	Hydrochloric acid (<36%)	Sulfuric acid (<10%)
Castor oil	Linseed oil	Tomato ketchup
Caustic soda (<40%)[1]	Methanol	Trichloroacetic acid (<50%)
Cutting oil	Nitric acid (<10%)	White Spirit
Cyclohexanol	Paraffin oil	Windex[1]
Diacetone alcohol	Persil powder in solution[1]	Wisk

[1]Extremely faint glossing of the texture was noted.

The Autoflex protective film withstands DIN 42 115 Part 2 exposure of up to 1 hour duration to glacial acetic acid without visible change.

The Autoflex protective film is not resistant to high pressure steam at over 100°C or the following chemicals:

Concentrated mineral acids	Benzyl alcohol
Concentrated caustic solution	Methylene chloride

5.2.2. Touch Screen Surface

The touch screen surface on the HMI panel withstands exposure to the following solvents without visible change:

Solvents	Time
Acetone	10 minutes
Isopropanol	10 minutes
Toluene	5 hours

The touch screen surface on the HMI panel is made of polyester with a hard coat to resist scratches and withstand exposure to many solvents without visible change.

5.2.3. Touch Screen Protector

For harsh environments and exposure to outdoor conditions, it is recommended to use a protective film to guard the touch screen from damage. This optional part can be ordered from Beijer Electronics.

6. HMI Panel Drawings

6.1. Connectors

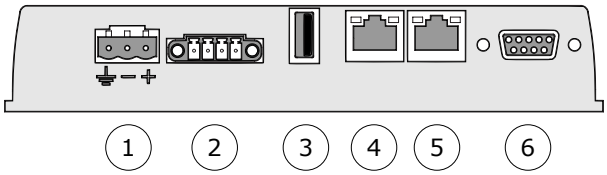

Pos	Connector	Description
1	Power supply	+24 V DC (18–32 V DC)
2	Digital out	Opto-MOS relay, 2x SPST. Normally open, isolated.
3	USB	USB Host 2.0, max output current 500 mA
4	LAN A	1×10/100 Base-T (shielded RJ45)
5	LAN B	1×10/100 Base-T (shielded RJ45)
6	COM	Serial communication port

6.1.1. Communication Ports

Pin	D-sub-9, female				
	COM 1	COM 2	COM 3	CAN 1	CAN 2
1		RS-422 Tx+ RS-485 Tx+/Rx+		CAN 1-H	
2	RS-232 RxD				
3	RS-232 TxD				
4		RS-422 Rx+	RS-485 Tx+/Rx+		CAN 2-H
5	GND	GND	GND	GND	GND
6		RS-422 Tx- RS-485 Tx-/Rx-		CAN 1-L	
7	RS-232 RTS				
8	RS-232 CTS				
9		RS-422 RX-	RS-485 Tx-/Rx-		CAN 2-L

The connector supports up to three independent communication channels and can be configured for RS-232 and RS-422 or 2x RS-485 or 2x CAN.

NOTE

In order to utilize two communication ports, the Y-split cable CAB109 can be used.

To use RS-232 and RS-422, use CAB 109.

6.1.2. Digital Outputs

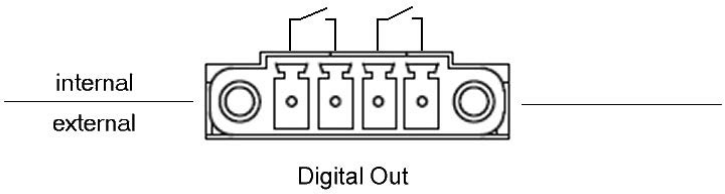

Ratings	
Maximum supply voltage	32.0 V (DC) / 22 V_{RMS} (AC)
Maximum load current	0.5 A (DC) / 0.5 A_{RMS} (AC)

Isolation	
Channel to Channel	1000 V (DC) /550 V_{RMS} (AC)
Channel to System	1000 V (DC) / 550 V_{RMS} (AC)

6.2. HMI Panel Outline

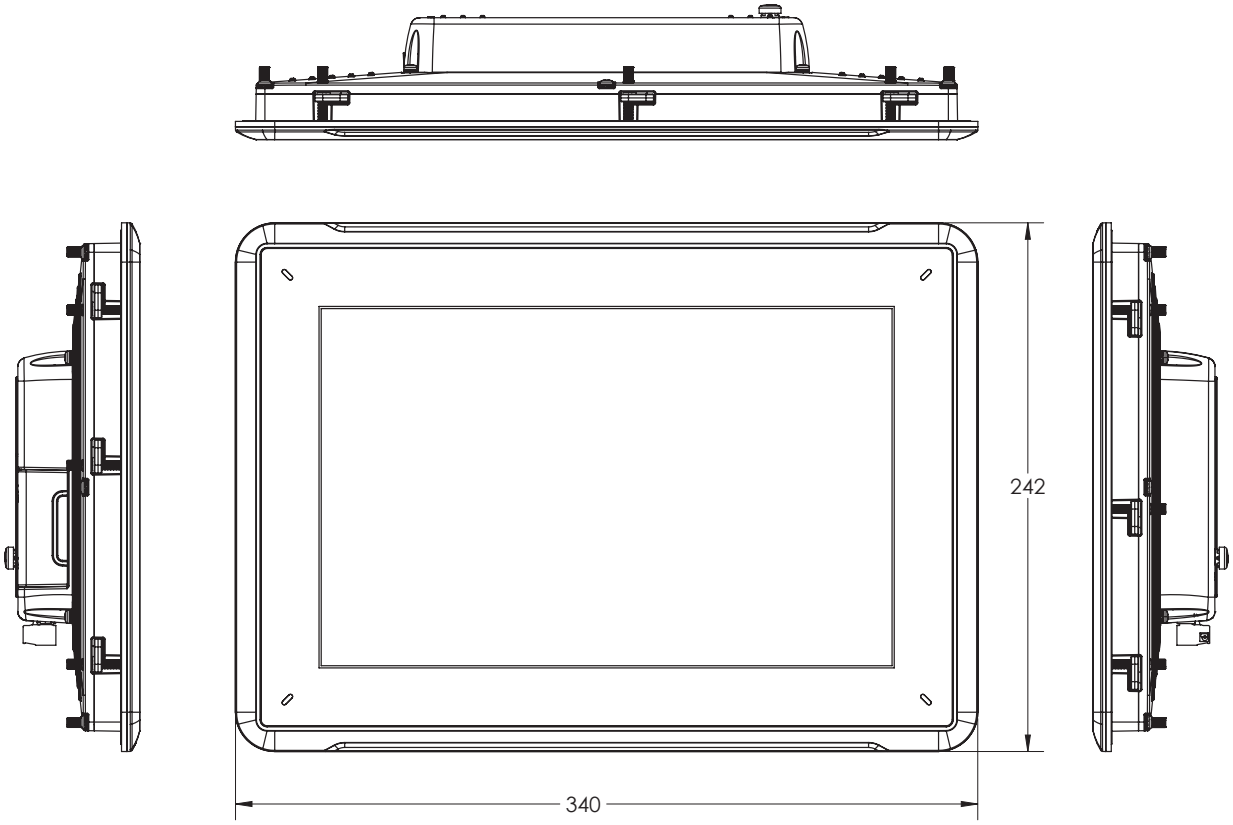

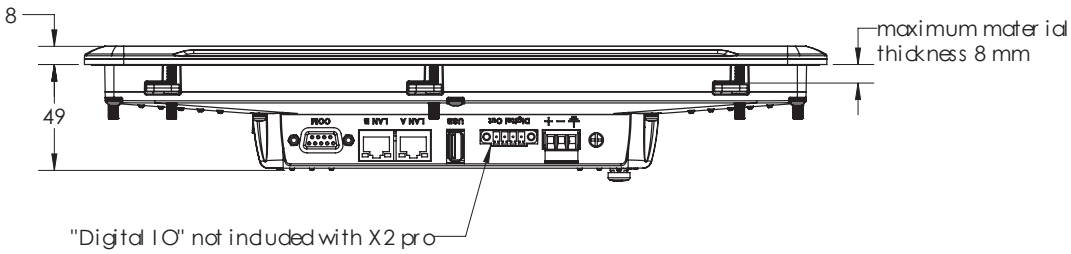

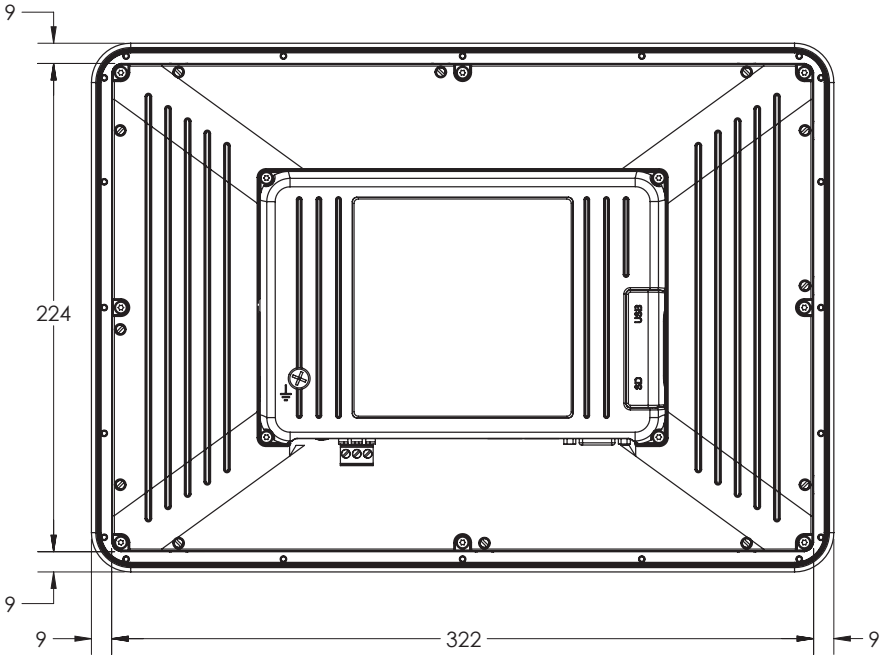

NOTE
A STEP CAD file is available on the Beijer Electronics website.

7. Additional Installation Tips

When experiencing communication problems in noisy environments or when operating close to temperature limits, the following recommendations are to be noticed.

7.1. Grounding the HMI Panel

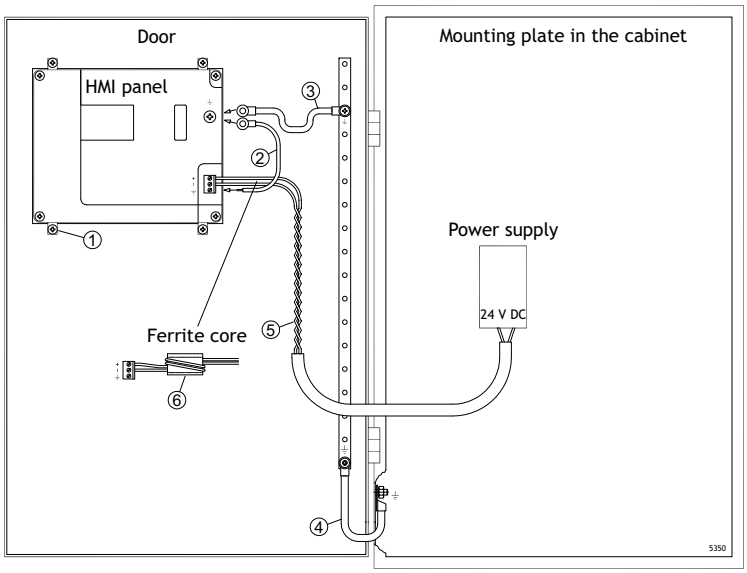

The mounting clamps of the HMI panel do not provide a secure grounding connection between the panel and the device cabinet, see **1** in drawing above. To ground the HMI panel:

1. Connect a wire, that is sized correctly according to local electrical codes, between the quick-connect terminal connector on the HMI panel and the chassis of the panel, see **2** in drawing above.
2. Connect a wire or grounding braid, that is sized correctly according to local electrical codes, between the chassis of the HMI panel and the closest grounding point on the door, see **3** in drawing above.
3. Connect a strong but short grounding braid between the door and the device cabinet, see **4** in drawing above.
4. Twist the cables onto the 24 V DC feed, see **5** in drawing above.
   - 2 turns around the ferrite core provide 4 times the suppression of 1 turn.
   - 3 turns around the ferrite core provide 9 times the suppression of 1 turn.

- Connect a wire or grounding braid, that is sized correctly according to local electrical codes, between the chassis of the HMI panel and the closest grounding point.

NOTE

The grounding wires should be short and the conductor should have a large area.

A long, thin grounding wire has a very high impedance (resistance) at high frequencies and does not guide disturbances to the ground.

Multi-wire conductors are better than single wire conductors with the same area.

A braided conductor wire with the same area is even better. The best is a short, thick grounding braid.

7.2. Ethernet Connection in the HMI Panel

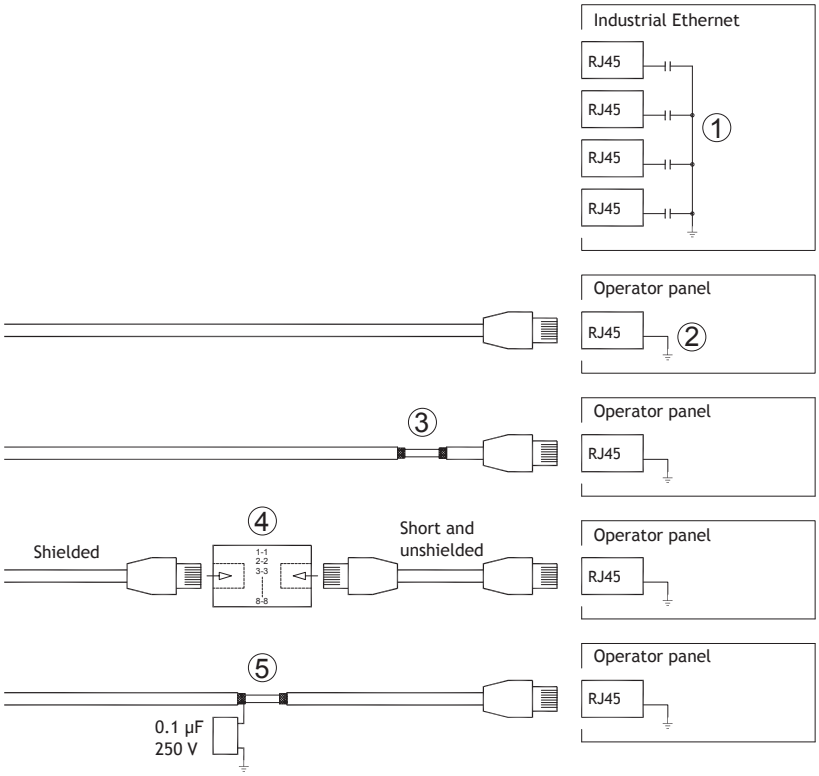

In some industrial units for Ethernet, the RJ45 contact's shield is connected to the chassis via a capacitor, see **1** in drawing above.

The Ethernet shield of the HMI panel is directly connected to the chassis, see **2** in drawing above.

Check whether the other Ethernet unit has its shield directly grounded or grounded via a capacitor.

NOTE

In many cases, connecting the shielded Ethernet cabling to the chassis at both ends is inappropriate. Humor grounding loops can occur. Unshielded cabling may even result in fewer communication errors.

A good solution may be to use a shielded Ethernet cable, but to connect the shield at one end only.

One option is to break the shield, see **3** in drawing above.

A more elegant method is to expand the shielded Ethernet cabling with a piece of unshielded Ethernet cable, see **4** in drawing above.

The shield can be grounded via an external 0.1 µF/250 V film capacitor, see **5** in drawing above. This connects the HF transients to ground.

7.3. To Achieve Better EMC Protection

- Initially, use the original cabling from Beijer Electronics primarily.
- Place the 24 V DC and communications cabling in one cable trunk/cable duct and 230/380 V AC in another. If the cables need to be crossed, cross them at 90° only. Avoid combining the cabling for stronger 24 V DC outputs with the communication cabling.
- Use shielded cables for RS-232 communication.
- Use twisted pair and shielded cabling for RS-422 and RS-485.
- Use the cabling intended for the bus type; Ethernet, Profibus, CC-Link, CAN, Device Net etc.
- Install and connect according to applicable specifications for the relevant bus standard.
- Use shielded cabling for Ethernet, preferably with foil and a braided shield.
- D-sub covers should be shielded, and the shield should be connected to the cover 360° where the cable enters.
- Connect the shield at both ends.

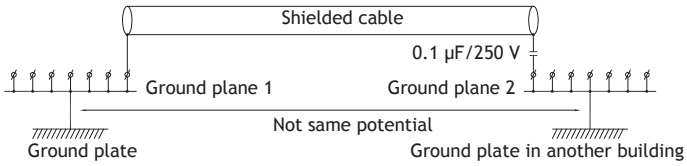

With longer distances, there is a risk that the ground potential may be different. In that case, the shield should only be connected at one end. A good alternative is to connect the other end of the shield to the ground via a 0.1 µF / 250 V film capacitor. Both ends are then connected to the ground in terms of HF, but only connected to the ground at one end in terms of LF, thus avoiding the 50/60 Hz grounding loops.

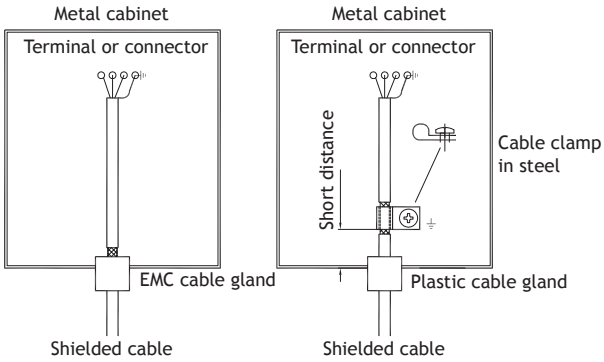

1. Use an EMC cable gland or regular plastic cable gland, remove the outer jacket and connect the shield to the installation plate with a 360° metal cable clamp.
2. Place the 24 V DC and communications cabling in one cable trunk/cable duct and 230/380 V AC in another. If the cables need to be crossed, cross them at 90° only. Avoid combining the cabling for stronger 24 V DC outputs with the communication cabling.

NOTE

Ferrite cores that are snapped onto the shielded cabling may remove minor disturbances. Large ferrite pieces that are snapped onto unshielded cabling and where the wires go 2-4 times around the cores are approximately 5-25 times more efficient.

7.4. Ambient Temperature

The maximum ambient temperature for the HMI panel is provided in the specifications. The ambient temperature refers to the temperature in the device cabinet which cools the HMI panel's electronics.

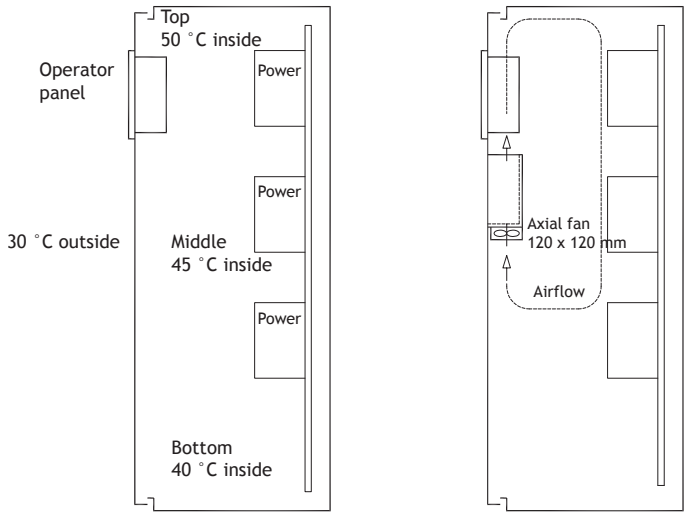

In most cases, the ambient temperature for the HMI panel is significantly higher than the device cabinet’s ambient temperature.

If the cabinet is tall and there are a number of heat-generating devices, the temperature at the top of the cabinet is considerably higher than the temperature increase that would be expected. All electronics are sensitive to heat. The lifespan of an electrolytic capacitor is cut in half with an 8-10 °C increase in temperature. A 15-20 °C temperature increase results in a quarter of the lifespan etc.

Rittal has a good program for estimating the anticipated average temperature in the cabinet as well as a large program for controlling the temperature in the device cabinet.

An enamel-coated steel cabinet has a radiant heat value of 5.5 W/m^2 per °C.

Installing a fan inside the cabinet evens out the temperature, while moving air provides considerably better cooling than still air.

Install the fan so that it sits in a cooler area and blows cold air against the HMI panel. If the fan is mounted at the top and sucks warm air upwards, the ambient temperature of the fan becomes higher, resulting in a shorter lifespan.

An approximate value of the net power consumption for the HMI panel can be calculated by multiplying the supply voltage with the current drawn by the HMI panel. This is assuming that all supplied power is transformed to heat.

NOTE

Please ensure that the temperature will not exceed the maximum ambient operating temperature in the enclosure. This can be influenced by other heat generating devices.

7.5. Safety

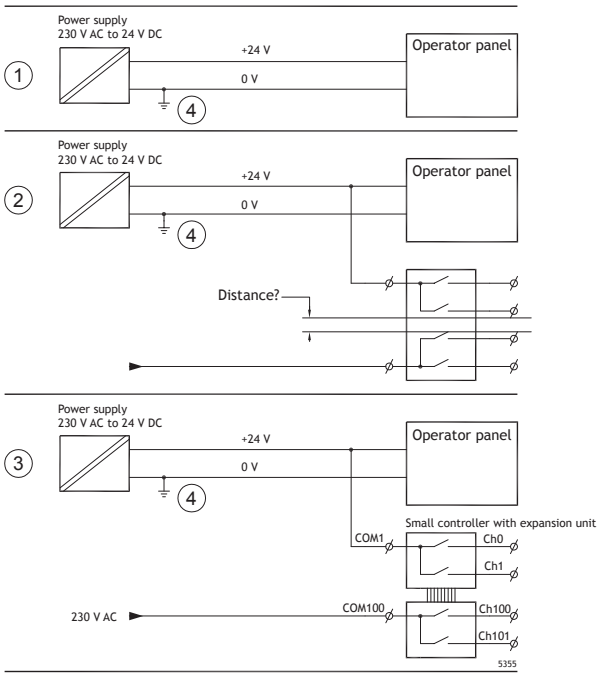

If a power supply that meets safety standards is used and only powers the HMI panel, there is no problem. See **1** in drawing above.

However, if a 24 V unit that also powers other units is used, there is reason to be cautious, see **2** in drawing above. The HMI panel does not have insulation that meets safety requirements in the event of a potential short circuit between 230 V AC and 24 V DC. It is assumed that the 24 V power supply is secure, for example, SELV according to EN 60950 (protection against electric shock) and UL 950.

NOTE

Here is an example that explains why a secure 24 V DC power supply can be ruined by mixing 24 V relay contacts with 230 V AC relay contacts in a smaller controller. Check that the clearances and creepage distances between 24 V DC and 230 V AC fulfill EN 60950 or UL 950. If not, input a separate 24 V unit into the HMI panel.

If there is a substantial distance between the relay contacts for 24 V DC and 230 V AC, it is OK to use the same 24 V devices for all feeds. See **3** in drawing above.

Connect 0 V on the 24 V power supply to the ground, see **4** in drawing above. This offers three advantages:

- Safety is increased. The 24 V power supply is not live in the event of a faulty connection or short circuit between 0 V (24 V) and 230 V phase.
- Transients on the 24 V feed are connected to the ground.

- No risk that the 24 V feed is at a high level in relationship to the ground. This is not unusual since there is high static electricity.

7.6. Galvanic Isolation

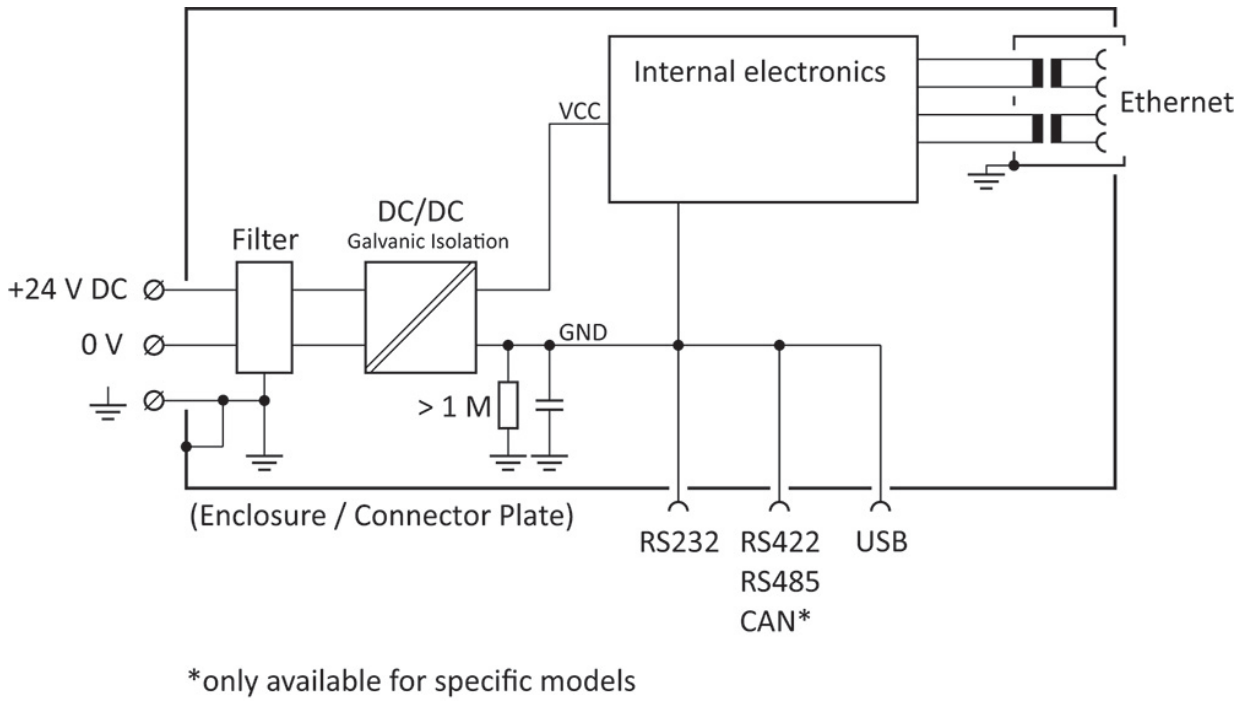

The HMI panel has galvanic isolation against the 24 V DC power supply but no galvanic isolation between the communication ports for RS-232, RS-422, RS-485, CAN and USB. Only the Ethernet connection has galvanic isolation.

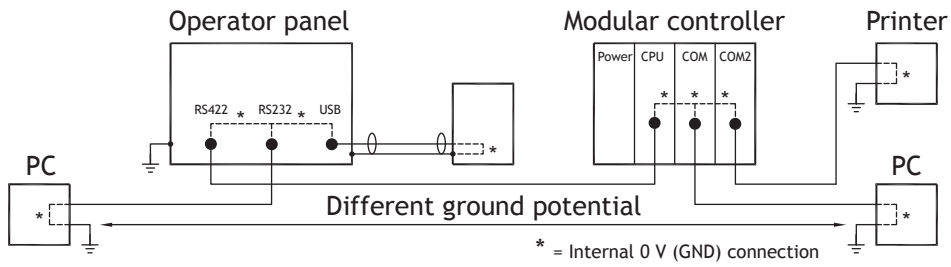

When a PC is connected to the HMI panel, the internal 0 V (GND) of the panel is connected to the protective ground via the PC.

A number of USB devices can have the shield connected together with the protective ground. In the image above, the 0 V (GND) of the HMI panel is connected to the protective ground when a USB memory stick, keyboard, or similar device is plugged in.

If a number of units are connected that have a 0 V and a ground connection, and these are connected to various grounding points, there is a substantial risk of problems. Grounding currents go through communication cables, the rear plate of the controller, internally in the HMI panel, and can cause errors.

Use external units to improve communication and achieve galvanic isolation. Westermo has good industry-standard insulators that are also insulated from the 24 V DC feed.

NOTE

It is very important to make sure that the 24 V feed in the external insulation unit is not connected to one of the communication outlets. If it does not have 100% insulation against the 24 V feed, disturbances and grounding currents from the 0 V on the 24 V side disrupt the communication.

Using this type of unit solves one problem but creates a larger problem! A substandard installation may work now, but problems may arise when other devices are connected.

7.7. Cable and Bus Termination RS-485

- If maximum transfer distance and maximum transfer speed is needed, shielded and twisted pair cable should be used. The mutual capacitance may not exceed 52.5 pF/m, and the cable area should be at least 0.25 mm^2 (AWG 24).
- 0 V, the reference voltage for communication should be included in the cabling. With two-way communication use two pairs; one pair for communication and one pair for 0 V.
- The shield must be grounded at one end. The other end is usually grounded, but with longer distances or when there is a difference in the ground potential, the shield should be connected to the ground via 0.1 µF / 250 V film capacitor to prevent ground current in the braided shield. Some manufacturers recommend that the shield be grounded at each node. Various manufacturers have different systems for bus termination.

Depending on the recipients' design, the bus wires may be on the same level or require pull-up or pull-down to ensure that no faulty signals are detected when the bus is in resting mode (all transmitters are disconnected).

7.8. CAN Interface

7.8.1. Cable Recommendations

- Use shielded, twisted pair cable to improve noise immunity and to reduce radiated emissions.
  Characteristic impedance: 120 Ohm (typical)
  Propagation delay: 5 ns/m
  Mutual capacitance: 40 pF/m (typical, wire to wire)
- Recommended cable cross section:
  Bus length 0-40 m: 0.25-0.34 mm^2 (AWG23,AWG22), 70 mOhm/m
  Bus length 40-300 m: 0.34-0.6 mm^2 (AWG22,AWG20), < 60 mOhm/m
  Bus length 300-600 m: 0.5-0.6 mm^2 (AWG20), < 40 mOhm/m
  Bus length 600-1000 m: 0.75-0.8 mm^2 (AWG18), < 26 mOhm/m
- GND should be included in the cabling to provide a reliable reference Ground for each CAN node (potential equalization). Use two wire pairs; one pair for communication and one pair for GND. Do not use the cable shield to connect GND.

7.8.2. Termination

- To achieve the best signal integrity, noise immunity and reliable bus performance, the CAN network must be terminated at its two most distant CAN nodes with 118Ohm... 130Ohm resistors. The recommended resistor value is 120 Ohm/1%/0.25W on each end.
- Place the termination resistor near the CAN bus connector (as close as possible).
- This product has no integrated termination resistors. They must be added externally.

7.8.3. Restrictions and Recommendations

- The maximum supported bit rate depends on bus load, bus topology, number of nodes, bus termination, propagation delay of each CAN node and the bus length.
- Do not connect more than 32 nodes to one CAN network without using a repeater.
- If the bus length exceeds about 200 m, it is recommended to use CAN nodes with built-in galvanic isolation.
- If the bus length exceeds 1000 m, a CAN bus repeater should be used.
- For additional information refer to the driver documentation for FreeCAN and Can Open in the iX Developer software.

7.9. USB Flash Drive

The USB port, or ports, are of 2.0 standard and support FAT16, FAT32 and exFAT file systems for USB flash drives (option, sold separately).

Size limitations for file systems:

- FAT16: up to 2 GB
- FAT32: up to 32 GB
- exFAT: up to 2 TB

7.10. Image Sticking

When utilizing TFT LCD HMI panels in applications where a fixed or partially fixed image remains displayed on the screen for extended periods of time, users may experience a phenomenon referred to by the LCD industry as Image Sticking. Image sticking, sometimes also called “image retention” or “ghosting", is a phenomenon where a faint outline of a previously displayed image remains visible on the screen when the image is changed.

Image sticking can be caused by:

- Static images
- No screensaver
- Sharp contrast transition (e.g. black/white)
- High ambient temperatures

How Image sticking can be avoided or reduced:

- Use the screensaver functionality (see SW manual).
- Changing constantly between static and dynamic images.
- Avoid excessive brightness differences between foreground and background elements.
- Use colors with similar brightness.
- Use complementary colors in follow-up images.