X3 pro 15 web

Hardware and Installation

MAEN416
2026-05-06

Beijer
ELECTRONICS

Copyright © 2026 Beijer Electronics AB. All rights reserved.

The information in this document is subject to change without notice and is provided as available at the time of publishing. Beijer Electronics AB, including all its group companies, reserves the right to change any information without updating this publication. Beijer Electronics AB, including all its group companies, assumes no responsibility for any errors that may appear in this document. Read the entire document prior to installing and using this equipment. Only qualified personnel may install, operate or repair this equipment. Beijer Electronics AB, including all its group companies, are not responsible for modified, altered or renovated equipment. Because the equipment has a wide range of applications, users must acquire the appropriate knowledge to use the equipment properly in their specific applications. Persons responsible for the application and the equipment must themselves ensure that each application is in compliance with all relevant requirements, standards and legislation in respect to configuration and safety. Only parts and accessories manufactured according to specifications set by Beijer Electronics AB, including all its group companies, may be used.

BEIJER ELECTRONICS AB, INCLUDING ALL ITS GROUP COMPANIES, SHALL NOT BE LIABLE TO ANYONE FOR ANY DIRECT, INDIRECT, SPECIAL, INCIDENTAL OR CONSEQUENTIAL DAMAGES RESULTING FROM THE INSTALLATION, USE OR REPAIR OF THIS EQUIPMENT, WHETHER ARISING IN TORT, CONTRACT, OR OTHERWISE. BUYER'S SOLE REMEDY SHALL BE THE REPAIR, REPLACEMENT, OR REFUND OF PURCHASE PRICE, AND THE CHOICE OF THE APPLICABLE REMEDY SHALL BE AT THE SOLE DISCRETION OF BEIJER ELECTRONICS AB, INCLUDING ALL ITS GROUP COMPANIES.

Table of Contents

1. Introduction 5
1.1. About This Hardware and Installation Guide 5
1.1.1. Safety and Information Notices 5
1.2. About X3 web 5
1.3. Naming Convention 6
1.4. References 6

2. Safety Precautions 7
2.1. General 7
2.2. During Installation 7
2.3. During Operation 8
2.3.1. Operating Conditions and Product Lifetime 8
2.4. Hazardous Materials 8
2.5. Disposal Requirements Under WEEE Regulations 9

3. Product Specifications 10
3.1. Technical Data 10
3.1.1. X3 pro 15 web 10
3.2. HMI Panel Drawings 12
3.2.1. HMI Panel Outline 12
3.2.2. Connectors 12
3.3. Product Label 14
3.3.1. Certification Block 15
3.4. Chemical Resistance 16
3.4.1. Touch Screen and Overlay Material 16

4. Configuration and Operation 18
4.1. Default IP Addresses 18
4.2. Open Ports 18
4.3. USB Ports 18
4.4. External Storage Media 18
4.4.1. General Advice for Writing to Flash 19

5. Mounting and Installation 20
5.1. Space Requirements (Keepout Areas) 20
5.2. Installation Process 20
5.2.1. Method 1: Mount the HMI Panel in a Cutout 20
5.2.2. Method 2: Mount the HMI Panel on a VESA Mount or Other Flat Surface 22
5.2.3. Power Supply Connection and Grounding 24
5.2.4. Controller Cabling Requirements 25
5.2.5. Other Connections and Peripherals 25
5.3. Additional Installation Guidelines 26
5.3.1. Grounding the HMI Panel 26
5.3.2. Grounding and Shielding Options for Ethernet Cabling 27
5.3.3. Improving EMC Protection 27
5.3.4. Ambient Temperature 29
5.3.5. Power Supply Safety 30
5.3.6. Galvanic Isolation 32
5.3.7. RS-485 Communication 33
5.3.8. Image Sticking 34

6. Service and Maintenance 35
6.1. Touch Screen Care 35
6.2. Cleaning the Touch Screen 35
6.2.1. Cleaning the Touch Screen with a Cleaning Agent 36
6.3. Air Bubbles in the Touch Screen 36

6.4. Battery Replacement 37
7. Dismantling and Disposal 38

1. Introduction

1.1. About This Hardware and Installation Guide

This document contains information on the **hardware** features of the X3 HMI panel. It provides in-depth specifications and guidance on installation and briefly describes configuration.

For more information on the **software** features, configuration, and operation, see X3 web Configuration and Operation.

1.1.1. Safety and Information Notices

This document uses the following admonitions to highlight safety-related and other important information:

WARNING
Indicates a potentially hazardous situation which, if not avoided, could result in death or serious injury, and major damage to the product.

CAUTION
Indicates a potentially hazardous situation which, if not avoided, could result in minor or moderate injury, and moderate damage to the product.

NOTE
Points out relevant facts and conditions.

IMPORTANT
Highlights key information.

TIP
Indicates helpful advice, recommendations, or best practices that can improve the user experience or make a task easier, but is not mandatory for completing the task.

1.2. About X3 web

X3 web are **industrial HMIs for HTML5 applications**. Using the **WebIQ** software enables you to create web HMI applications through an intuitive drag-and-drop interface and straightforward configuration, with no coding required. X3 web allows you to run WebIQ on the device as a container application or as a browser application.

1.3. Naming Convention

Each HMI panel's name is determined by its properties.

Product family and display size

Parameter	Values
Family	pro, marine, extreme
Display size (inches)	7, 10, 12, 15, 21

Additional options

Option	Description
web	Web HMI with HTML5 web client.
P	"Plus" version supporting additional features such as isolated COM ports, CAN bus, and extra USB port.
HB	High brightness display.
CT	Capacitive touch screen (PCAP).
WebIQ	HMI bundled with WebIQ license.

Examples

Model name	Description
X3 pro 7	X3 pro 7 inch HMI. Standard version with resistive touch screen.
X3 extreme 12 web P CT	X3 extreme 12 inch web panel. Plus version with capacitive touch screen (PCAP).
X3 extreme 12 web P HB WebIQ	X3 extreme 12 inch web panel with resistive touch screen. Plus version including high brightness display, bundled with 4 000 tags WebIQ license.

NOTE
Not all combinations are available.

1.4. References

Name
X3 web Configuration and Operation
WebIQ documentation

2. Safety Precautions

Both the installer and users of the HMI panel must read and understand this manual.

2.1. General

- Read all safety precautions carefully.
- Inspect the delivered items for transportation damage. In the event of any damage, inform the supplier.
- Do not use the HMI panel in an environment with high explosive hazards!
- The supplier is not responsible for modified, altered, or reconstructed equipment.
- Use only parts and accessories manufactured according to specifications from the supplier.
- Read the installation and operating instructions carefully before installing, using or repairing the HMI panel.
- Never allow fluids, metal filings or wiring debris to enter any openings in the HMI panel. This may cause fire or electrical shock.
- Only qualified personnel may operate the HMI panel.
- Storing the HMI panel in environments with temperatures either lower or higher than those specified below, may lead to the congealing and isotropic transformation of the LCD display liquid.
  X3 pro, marine: -20°C to +70°C
  X3 extreme: -30°C to +80°C
  X3 extreme CT: -40°C to +80°C
- The LCD display liquid contains a powerful irritant. In case of skin contact, wash immediately with plenty of water. In case of eye contact, hold the eye open, flush with plenty of water and get medical attention.
- The images in this manual serve an illustrative purpose. Because of the many variables associated with any particular installation, the supplier cannot assume responsibility for actual use based on the images.
- The supplier does not provide a guarantee that the HMI panel is suitable for any specific application, and also disclaims responsibility for product design, installation, or operation.
- Power on and power off the HMI panel at least once before installing any new components or connecting it to external devices (e.g., serial devices).

2.2. During Installation

- Install the HMI panel according to the accompanying installation instructions.
- Ground the HMI panel according to the accompanying installation instructions.
- Only qualified personnel should perform the installation of the HMI panel.
- Separate high voltage cables from signal and supply cables.
- Prior to connecting the HMI panel to the power outlet, verify that the voltage and polarity of the power source are correct.
- Peripheral equipment must be suitable for the application and the specific location in which it will be used.
- Use shielded communication cables.

2.3. During Operation

- Keep the HMI panel clean.
- Do not use the HMI panel to control emergency stop or other safety-critical functions.
- Do not use excessive force when operating the touch screen.
- Do not use sharp objects on the touch screen.

2.3.1. Operating Conditions and Product Lifetime

Beijer Electronics products are designed and manufactured according to the specifications defined for each model. Each product is tested and certified to applicable standards to ensure reliable operation within the specified environmental and operational limits.

Continuous operation at the extreme limits of these specifications may increase wear and reduce product lifetime.

To maximize service life and long-term reliability, Beijer Electronics recommends the following:

- Operate the HMI panel within normal temperature and humidity ranges whenever possible.
- Avoid continuous exposure to extreme environmental conditions.
- Avoid excessive vibration.
- Avoid unnecessary memory overwrite cycles.
- Avoid other harsh operating conditions that may affect the product lifetime.
- Be aware that direct sunlight can heat up the display above its maximum ambient temperature, even if the air temperature is lower.

2.4. Hazardous Materials

Part description **零件描述**	**Toxic and hazardous materials or elements** **有毒和有害的材料或元素**									
	Pb	Hg	Cd	Cr^{6+}	PBB	PBDE	DBP	BBP	DEHP	DIBP
PCB and electronic components PCB 和电子元件	X	O	O	O	O	O	O	O	O	O
Housing 外壳	O	O	O	O	O	O	O	O	O	O
Display / touch 显示屏 / 触控	X	O	O	O	O	O	O	O	O	O
Cables and connectors 电缆和连接器	O	O	O	O	O	O	O	O	O	O

O: Indicates that the concentration of the hazardous substance in all homogeneous materials in the parts is below the relevant threshold of EU RoHS 2 Directive 2011/65/EU, China RoHS GB/T 26572-2011 standard and EU Directive 2015/863 Annex II.

O: 表示该有害物质在该部件所有均质材料中的含量均在欧盟 RoHS 2 指令 2011/65/EU, 中国 RoHS 标准 GB/T 26572-2011 及欧盟指令 2015/863 附件 II 规定的限量要求以下。

X: Indicates that the concentration of the hazardous substance of at least one of all homogeneous materials in the parts is above the relevant threshold of the GB/T 26572-2011 standard. But still complies with the EU RoHS Directive 2011/65/EU.

X: 表明该有害物质至少在部件的某一均质材料中的含量超出 GB/T 26572-2011 规定 的限量要求。但仍然符合 EU RoHS 指令 2011/65/EU。

Environmental protection use period: 50 years

环保使用期限 50 年

2.5. Disposal Requirements Under WEEE Regulations

For professional users in the European Union: If you wish to discard electrical and electronic equipment (EEE), please contact your dealer or supplier for further information.

For disposal in countries outside of the European Union: If you wish to discard this product please contact your local authorities or dealer and ask for the correct method of disposal.

3. Product Specifications

3.1. Technical Data

3.1.1. X3 pro 15 web

Front panel, W × H × D	410 × 286 × 8 mm
Cutout dimensions, W × H	394 × 270 mm
Mounting depth	66 mm
Standalone mounting	VESA 75 × 75
Front panel seal	IP 65 (not evaluated by UL), Type 4X and Type 12, indoor use, wet
Rear panel seal	IP 20 (not evaluated by UL), open type (for UL only)
Touch screen material	Polyester on glass, ITO film, resistive
Frame overlay	Autoflex EB
Touch screen operations	1 million finger touch operations
Reverse side material	Powder-coated aluminum
Frame material	Powder-coated aluminum
Weight	3.8 kg
CPU	i.MX 8M Plus Quad Cortex®-A53 1.6GHz
D-SUB 1	9-pin D-sub contact with: 1 × RS-232 1 × multifunction: 1 × RS-422, or 2 × RS-485, or 1 × RS-485 + 1 × CAN
Ethernet LAN A	10/100/1000 Mbit/s, shielded RJ 45
Ethernet LAN B	10/100/1000 Mbit/s, shielded RJ 45
USB	1 × USB host 2.0, 1 × USB host 3.0
External storage media	1 × SD card
Flash memory (application memory)	32 GB EMMC (NAND Flash)
Memory RAM	4 GB (DDR4)
LED	1 × multicolor
Real time clock	Yes
Battery	Lithium battery type BR 2450A
Power consumption (typ) / (max)	21 W / 26 W
Fuse	Internal DC fuse, 4 AT

Power supply	+24 VDC (18–32 V DC) isolated (SELV) **Compliance requirements:** • **CE** The power supply must conform with the requirements according to EN/IEC 62368-1, EN/IEC 60950-1 and EN/IEC 61558-2-4. • **UL and cUL (North America and Canada)** The unit shall be supplied by an isolated power source which fulfils the requirements of: • Limited-Energy Circuit in accordance with UL/CSA 61010-1/ UL/CSA 61010-2-201, or • Limited Power Source (LPS) in accordance with UL/CSA 60950-1, or • a Class 2 supply source which complies with the National Electrical Code (NEC), NFPA 70,Clause 725.121 and Canadian Electrical Code (CEC), Part I, C22.1. *Typical examples are a Class 2 transformer or a Class 2 power sources in compliance with, UL 5085-3/ CSA-C22.2 No. 66.3 or UL 1310/CSA-C22.2 No. 223.*
Pollution degree	Front: 3 Rear: 2
Altitude	3000 m
Overvoltage category	II
Display	TFT-LCD with LED backlight 15.4”, 1280 × 800 pixels, 262 k colors
Active area of display, W × H	331.2 × 207.0 mm
Pixel errors	Class I (ISO 9241-307)
Backlight brightness	450 cd/m^2 dimmable
Backlight lifetime	50 000 h
Ambient temperature range (operating)	-10°C to +60°C
Ambient temperature range (storage)	-20°C to +70°C
Relative humidity in operation	5% to 85% non-condensation
Vibration	Sinusoidal, 1 g, 2~100 Hz, X/Y/Z directions for 2 h; Random, 3~100 Hz, 1.5 G_{rms}, X/Y/Z directions for 2.5 h according to IACS UR E10; IEC/EN 60068-2-6 compliant
Mechanical shock	Half sine wave, 15 g, 11 ms, 3 axis/6 faces/18 times; IEC/EN 60068-2-27 compliant
Approvals and certifications	CE/FCC/KCC

3.2. HMI Panel Drawings

3.2.1. HMI Panel Outline

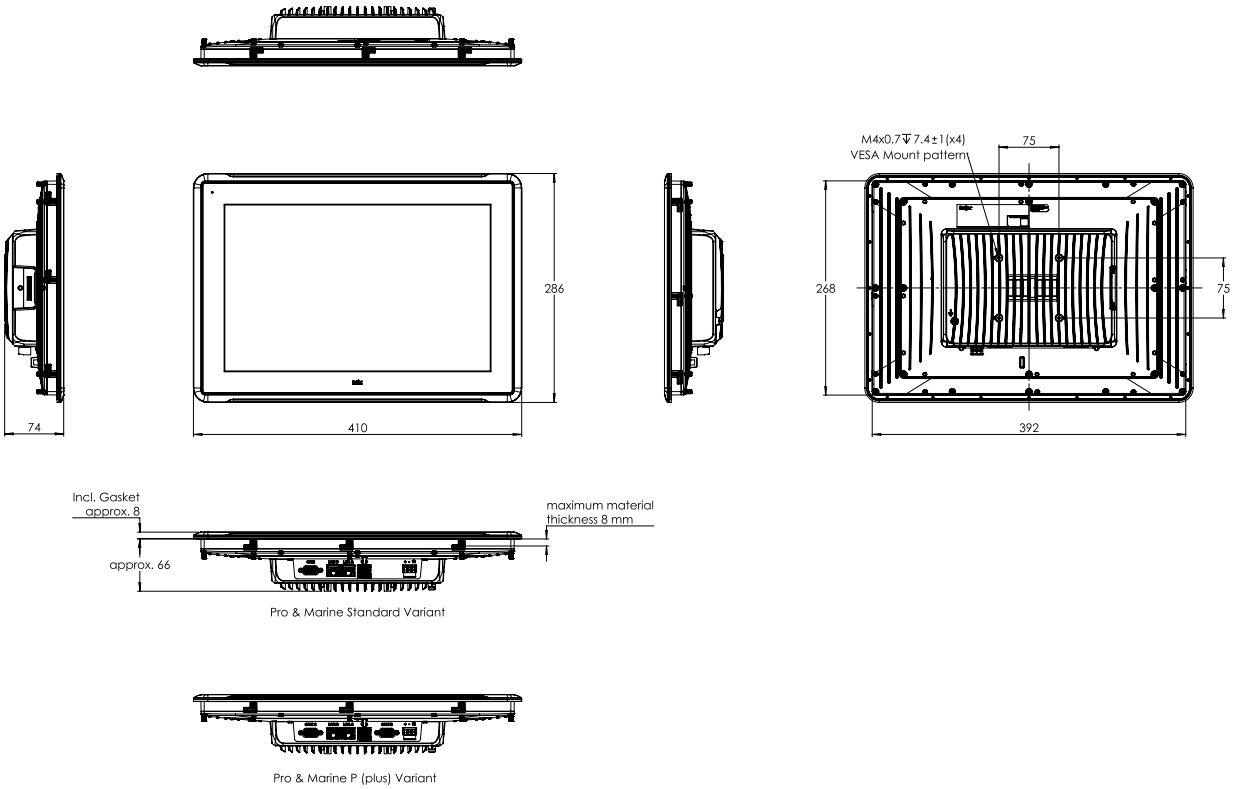

NOTE
Minimum thickness for the front plate is 2.0 mm.

NOTE
A STEP CAD file is available on the Beijer Electronics website.

3.2.2. Connectors

COM PORT
The **Linux** operating system lets you access and configure the COM port, but it cannot be configured through the **Settings Menu** in the **X3 system image**.

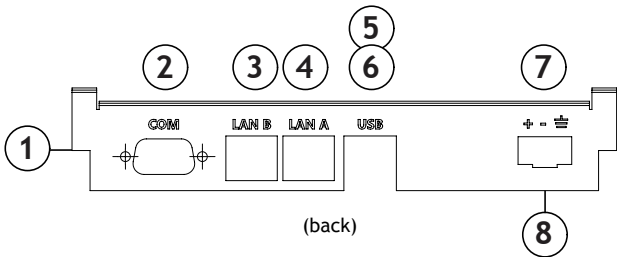

Pos	Connector	Description
1	SD Card	SDHC, SDXC High Speed, UHS-I (1.8 V)
2	COM-A	DSUB (9-pin, female), serial communication port
3	LAN-B	RJ45 (shielded), 10/100/1000 Mbit
4	LAN-A	RJ45 (shielded), 10/100/1000 Mbit
5	USB-A	USB 2.0 Host, max output current 500 mA
6	USB-B	USB 3.0 Host, max output current 900 mA
7	Power supply	3-pin screw connector, +24 V DC (18-32 V DC)
8	Ground screw	Screw to connect functional ground

Power supply pin assignment

Pos	Description
+	Vin+ (main input supply voltage)
-	Vin- (power ground)
≙	FG (frame ground)

COM

Female DB9	Pin	Serial port pin assignment					
		COM 1	Alt 1 (RS-422)	Alt 2 (2 × RS-485)		Alt 3 (CAN + RS-485)	
			COM 2	COM 2	COM 3	CAN 1	COM 3
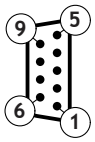	1		RS-422 TX+	RS-485 TX+/RX+		CAN1-H	
	2	RS-232 RXD					
	3	RS-232 TXD					
	4		RS-422 RX+		RS-485 TX+/RX+		RS-485 TX+/RX+
	5	GND					
	6		RS-422 TX-	RS-485 TX-/RX-		CAN1-L	
	7	RS-232 RTS					
	8	RS-232 CTS					
	9		RS-422 RX-		RS-485 TX-/RX-		RS-485 TX-/RX-

The connector supports up to three independent serial communication channels and can be configured for RS-232 together with:

- RS-422 (alternative 1)
- 2 × RS-485 (alternative 2)
- CAN + RS-485 (alternative 3)

3.3. Product Label

The product label is located on the back of the X3 pro 15 web. It contains identification data, electrical ratings, certification marks, and safety information.

NOTE
The label shown is an example. The actual label on your unit may differ.

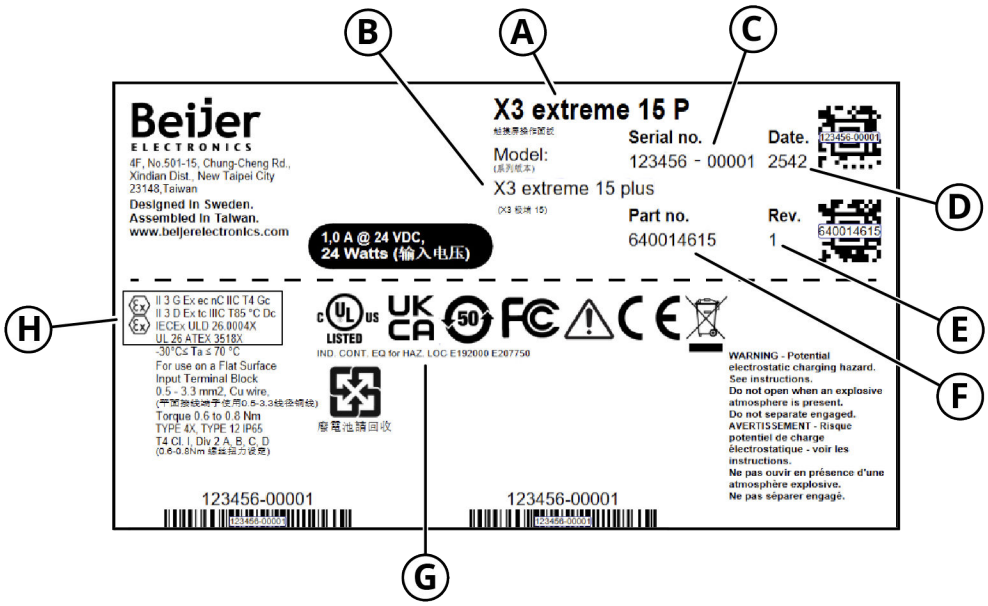

A. **Product name** – The full product name.

B. **Model type** – The model name.

C. **Serial number** – The serial number identifies the individual unit. A QR code encodes the serial number for scanning.

D. **Production date** – The production date is printed in year/week format (for example, 2542 = week 42 of 2025).

E. **Hardware revision** – The hardware revision (Rev.) number of the unit.

F. **Part number** – The part number identifies the product variant. A QR code encodes the part number for scanning.

G. **UL hazardous location rating** – Indicates that the unit is listed as industrial control equipment for hazardous locations. E192000 and E207750 are the UL file numbers.

H. **Certification block** – ATEX and IECEx certification data. See Certification Block for details.

3.3.1. Certification Block

The certification block in the lower-left area of the label contains the explosion protection classification and certificate numbers.

For installation requirements in hazardous locations, see Installation Process (Method 1). For the full list of approvals and certifications, see Technical Data.

Token	Type	Meaning	Reference
Ex	Certification mark	ATEX certification mark.	2014/34/EU
II	Equipment group	Surface industry, non-mining.	2014/34/EU
3 G	Category, gas	Zone 2. Explosive atmosphere unlikely under normal conditions.	2014/34/EU
3 D	Category, dust	Zone 22. Explosive atmosphere unlikely under normal conditions.	2014/34/EU
Ex	Protection mark	Equipment meets one or more Ex protection types.	EN/IEC 60079-0

Token	Type	Meaning	Reference
ec	Protection type, gas	Increased Safety. Prevents excessive temperatures, arcs, and sparks.	EN/IEC 60079-7
nC	Protection type, gas	Enclosed construction or restricted breathing.	EN/IEC 60079-15
tc	Protection type, dust	Protection by enclosure.	EN/IEC 60079-31
IIC	Gas group	Most demanding. Includes acetylene and hydrogen. Also covers IIA and IIB.	EN/IEC 60079-0
IIIC	Dust group	Most demanding. Includes conductive dusts. Also covers IIIA and IIIB.	EN/IEC 60079-0
T4	Temperature class, gas	Max. surface temperature 135 °C.	EN/IEC 60079-0
T85 °C	Temperature class, dust	Max. surface temperature 85 °C.	EN/IEC 60079-0
Gc	EPL, gas	Zone 2. Normal operation must not cause ignition.	EN/IEC 60079-0
Dc	EPL, dust	Zone 22. Normal operation must not cause ignition.	EN/IEC 60079-0
IECEx ULD 26.0004X	Certificate	Suffix X: specific conditions of use apply.	IECEx
UL 26 ATEX 3518X	Certificate	Suffix X: specific conditions of use apply.	2014/34/EU

3.4. Chemical Resistance

3.4.1. Touch Screen and Overlay Material

3.4.1.1. Protective Film

The Autoflex protective film covers the overlay surrounding the screen.

Solvent Resistance

The protective film withstands exposure of more than 24 hours duration under DIN 42115 Part 2 to the following chemicals without visible change:

Acetonitrile	Diesel	Petroleum spirit[1]
Ajax / Vim in solution	Downy / Lenor[1]	Phosphoric acid (<30%)
Alkalicarbonate solution[1]	Ethanol	Potassium ferricyanide
Ammonia (<40%)[1]	Glycerine	Potassium hydroxide (<30%)
Acetic acid (<50%)	Glycol	Pure Turpentine
Ariel powder in solution[1]	Gumption[1]	SBP 60/95[1]
Bleach[1]	Hydrochloric acid (<36%)	Sulfuric acid (<10%)
Castor oil	Linseed oil	Tomato ketchup
Caustic soda (<40%)[1]	Methanol	Trichloroacetic acid (<50%)
Cutting oil	Nitric acid (<10%)	White Spirit
Cyclohexanol	Paraffin oil	Windex[1]
Diacetone alcohol	Persil powder in solution[1]	Wisk

[1]Extremely faint glossing of the texture was noted.

The Autoflex protective film withstands DIN 42 115 Part 2 exposure of up to 1 hour duration to glacial acetic acid without visible change.

The Autoflex protective film is not resistant to high pressure steam at over 100°C or the following chemicals:

Concentrated mineral acids	Benzyl alcohol
Concentrated caustic solution	Methylene chloride

3.4.1.2. Touch Screen Surface

The touch screen surface on the HMI panel is made of polyester with a hard coat to resist scratches and withstand exposure to the following solvents without visible change:

Solvents	Time
Acetone	10 minutes
Isopropanol	10 minutes
Toluene	5 hours

3.4.1.3. Touch Screen Protector

To safeguard the touch screen from damage in harsh environments and outdoor exposure, it is advisable to use a protective film. This optional part can be ordered from Beijer Electronics.

4. Configuration and Operation

Power on your X3 HMI panel and follow the instructions on the screen.

For more information on configuration and operation, see X3 web Configuration and Operation.

4.1. Default IP Addresses

These are the default IP addresses for the X3 HMI panels:

Port	IP address
LAN A	DHCP
LAN B (if available)	DHCP

4.2. Open Ports

No open ports for the default configuration.

Type	Description	Open by default
TCP	Secure Shell (SSH) (22)	No

4.3. USB Ports

If there is only one USB port, it follows the 3.0 standard. For devices with two USB ports, USB-A supports the 2.0 standard, while USB-B supports 3.0.

Both ports are compatible with FAT16, FAT32, and exFAT file systems for USB flash drives (sold separately).

Size limitations for file systems:

- FAT16: up to 2 GB
- FAT32: up to 32 GB
- exFAT: up to 2 TB

The USB port(s) also support connecting a keyboard and mouse.

4.4. External Storage Media

IMPORTANT
Beijer Electronics recommend using industrial grade SDHC or SDXC cards.

An external memory card (SD, SDHC or SDXC, with FAT16, FAT32 or exFAT file systems) can be inserted (option, sold separately).

Size limitations for file systems:

- FAT16: up to 2 GB (SD)
- FAT32: up to 32 GB (SDHC)

- exFAT: up to 2 TB (SDXC)

The SD card slot is located on the left side of the back cover when the screen is facing you.

NOTE
Extensive data logging and other write-intensive operations on the internal storage may wear out the flash memory. The recommendation is therefore to store data on an SD card.

4.4.1. General Advice for Writing to Flash

If an SD card is not available, follow the recommendations below to reduce flash memory wear and extend the lifespan of the HMI panel.

CAUTION
A failed flash memory stops the HMI panel from operating.

To reduce flash memory wear:

- Log only the values you need. Avoid logging floating point values where possible.
- Use the hysteresis functionality in the connected controller to reduce logging of high-fluctuating values.
- Group high-fluctuating values in a separate logger and do not mix with stable values.
- Set the refresh rate no higher than needed.
- Disable logging when the information is not needed, for example when the machine is not running.
- Use the default **Log changes only** setting in the Data Logger properties.
- Keep the log size to a minimum.
- Avoid extensive file writing when controlling storage via script.

5. Mounting and Installation

5.1. Space Requirements (Keepout Areas)

The following table specifies the necessary free space (keepout area) around the mounted HMI panel.

Installation plate thickness (for cutout mounting)	2.0 ± 0.1 mm – 6.0 ± 0.1 mm
Space above and below the HMI panel	100 mm
Space to the left and right of the HMI panel	50 mm
Space behind the HMI panel	100 mm

CAUTION

Do not place heat sources within the keepout areas around the HMI panel. Heat sources may increase the ambient temperature and cause the panel to exceed its specified operating limits.

5.2. Installation Process

CAUTION

- Before installation, ensure that the ambient temperature range meets the following specifications:
  -10°C to +60°C
- If condensation is present, ensure that the HMI panel is dry before connecting it to the power outlet.
- Verify that the voltage and polarity of the power source are correct.

NOTE

Ensure that the HMI panel and the controller have the same electrical grounding (reference voltage level). Otherwise, communication errors may occur.

There are two recommended methods for mounting the HMI panel:

- Use Method 1 to mount the HMI panel in a cutout.
- Use Method 2 to mount the HMI panel on a VESA mount or other flat surface.

5.2.1. Method 1: Mount the HMI Panel in a Cutout

This section explains how to install the HMI panel in a metal sheet cutout, such as on an electrical cabinet door.

Required tools

- Phillips/slot screwdriver

Mounting instructions

1. Unpack and check the delivery. If any damage is found, contact the supplier.

> **CAUTION**
> Place the HMI panel on a stable surface during installation. Dropping or allowing the panel to fall may cause damage.

2. Create the cutout for the HMI panel based on the following dimensions:
   394 ± 1.0 mm × 270 ± 1.0 mm

> **NOTE**
> The above dimensions are roughly 2 mm larger in both width and height than the actual back cover of the panel.

Cutout drawing

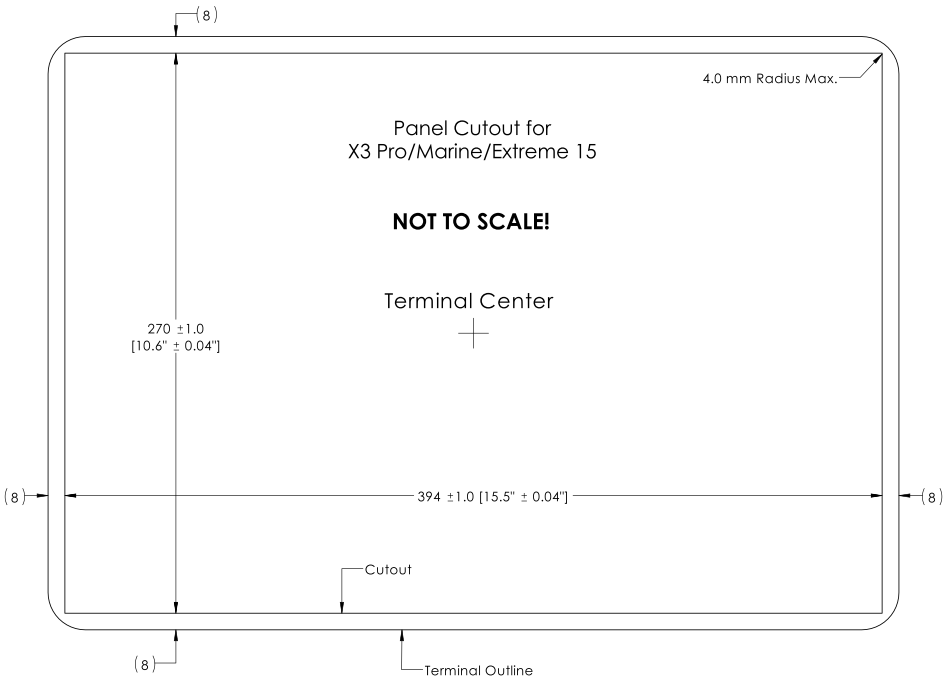

Measurements in millimeters [inches]

3. Ensure that the mounting surface around the cutout is smooth and cleaned from any burrs or debris. The mounting surface must be flat. It must be made from a single piece to ensure that the whole gasket joint remains sealed even when the enclosure (or control cabinet) is opened for maintenance. Moveable or removable parts of the enclosure must not overlap with the gasket joint.
4. Place the HMI panel in the cutout.
5. Secure the HMI panel in position by screwing the slotted thumb screw clockwise, allowing the built-in bracket to flip out and tighten against the metal sheet as shown. Tighten the screws to a torque of 0.9 ± 0.1 Nm.

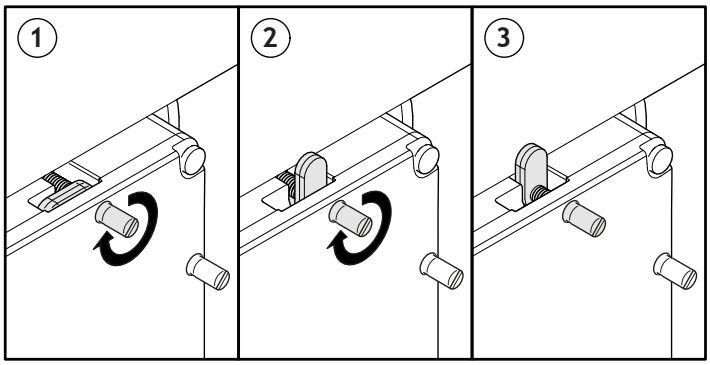

6. In cases where the ingress protection of the front panel seal is critical (IP54 to IP65, NEMA Type 4, 4X or 12), use a torque wrench to ensure all screws are tightened to the specified torque. For the supported ingress protection (IP rand NEMA Type rating), see the Technical Data chapter.
7. Follow the steps below to connect the cables in the correct order as shown in the drawing:

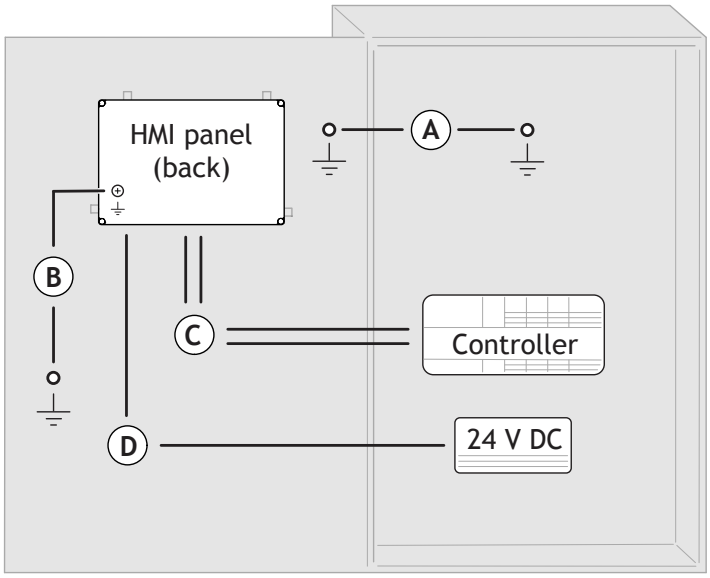

   A. Connect grounding cable A.
   B. Connect grounding cable B.
   C. Connect serial and Ethernet cable(s).
   D. Connect power cable.
8. Carefully peel off the protective film covering the HMI panel display to avoid generating static electricity, which could potentially damage the panel.

5.2.2. Method 2: Mount the HMI Panel on a VESA Mount or Other Flat Surface

The following section describes how to install the HMI panel on a VESA mount or a flat surface.

WARNING

Required tools

- Phillips/slot screwdriver

- Four M4 × 0.7 screws

Mounting instructions

1. Unpack and check the delivery. If any damage is found, contact the supplier.

> **CAUTION**
> Place the HMI panel on a stable surface during installation. Dropping or allowing the panel to fall may cause damage.

2. Install the unit on a VESA compliant mounting bracket, or drill the correct hole pattern according to the following drawing:

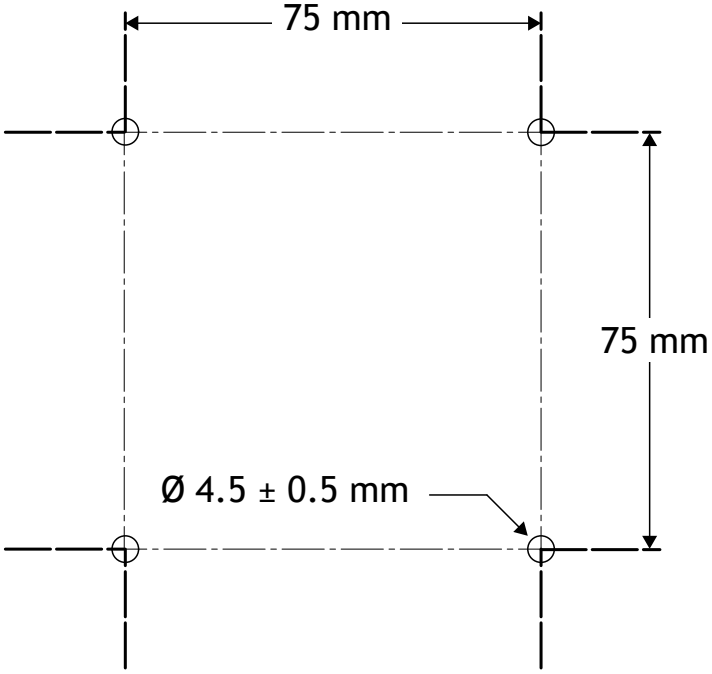

3. Fasten the HMI panel according to the following specifications.

Measurement	Value
Screw thread type	M4 × 0.7 mm
Screw thread depth	Max. 7 mm
Required engagement	Min. 5 mm
Torque	1.9 Nm ± 0.1 Nm

4. Follow the steps below to connect the cables in the correct order as shown in the drawing:

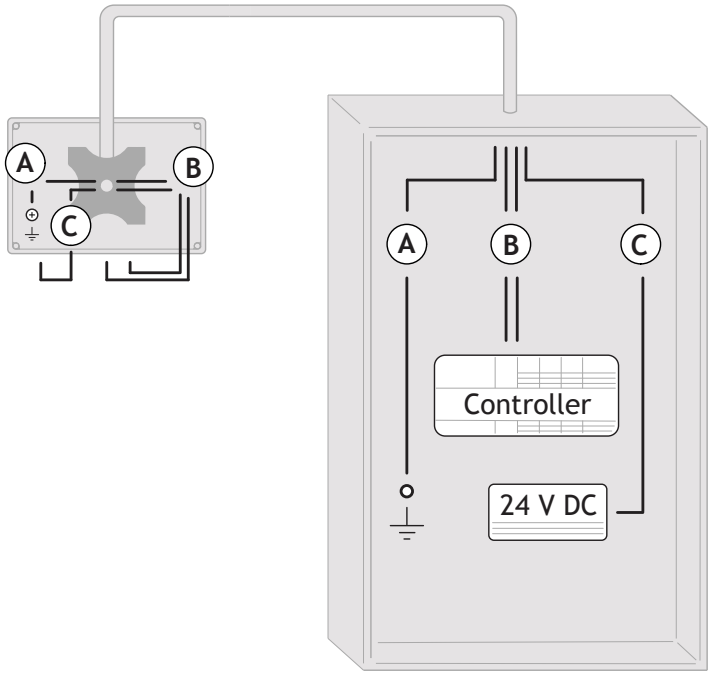

A. Connect grounding cable.
B. Connect serial and Ethernet cable(s).
C. Connect power cable.

5.2.3. Power Supply Connection and Grounding

5.2.3.1. Power Supply Connector

Connect the power supply cable according to the specifications below.

Cable Specifications

Parameter	Specification	Notes
Cable cross section	0.75 mm² – 2.5 mm²	Stranded or solid wire
Strip-off length	5.5 mm ± 0.5 mm	
Mounting torque	0.7 Nm ± 0.1 Nm	

NOTE
The temperature rating of the cable must be suitable for the installation environment.

5.2.3.2. Equipotential Grounding

The HMI panel has a Functional Earth (FE/FG) connection on the power connector and on the rear of the panel (M5 screw). Connecting the Functional Earth improves electromagnetic compatibility (EMC) and helps prevent the buildup of static electricity.

NOTE
Use the grounding screw on the rear of the HMI panel when possible. This keeps the grounding connection intact even if the power connector is disconnected.

To connect the Functional Earth:

1. Connect the Functional Earth to the cabinet where the HMI panel is mounted. If a dedicated Functional Earth is not available, connect to the Protective Earth (PE) instead.
2. Attach a closed cable lug to the grounding cable.
3. Place the serrated washer between the cable lug and the screw head.
4. Connect the grounding cable to the M5 screw on the rear of the panel.
5. Tighten the M5 screw to 2.0 Nm ± 0.2 Nm.

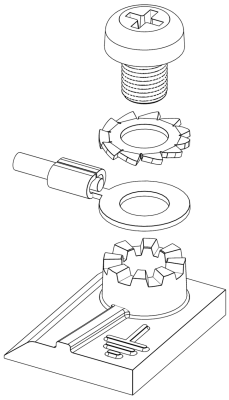

M5 assembly drawing

Use a grounding cable that meets the following specifications:

Parameter	Specification	Notes
Cable cross section	2.5 mm² – 10 mm²	Stranded or solid wire, or grounding strap
Recommended cable length	< 350 mm	If 2.5 mm² cable is used
Cable lug	M5 hole	Closed type
Mounting torque	2.0 Nm ± 0.2 Nm	M5 screw

5.2.4. Controller Cabling Requirements

For details on the cables required to connect the HMI panel to the controller, consult the documentation for the corresponding controller's driver.

5.2.5. Other Connections and Peripherals

Ensure that cables, peripheral equipment, and accessories are appropriate for the application and its environment. For additional details or recommendations, consult the supplier.

5.3. Additional Installation Guidelines

5.3.1. Grounding the HMI Panel

Follow these recommendations if you experience communication problems or operate the HMI panel close to its temperature limits.

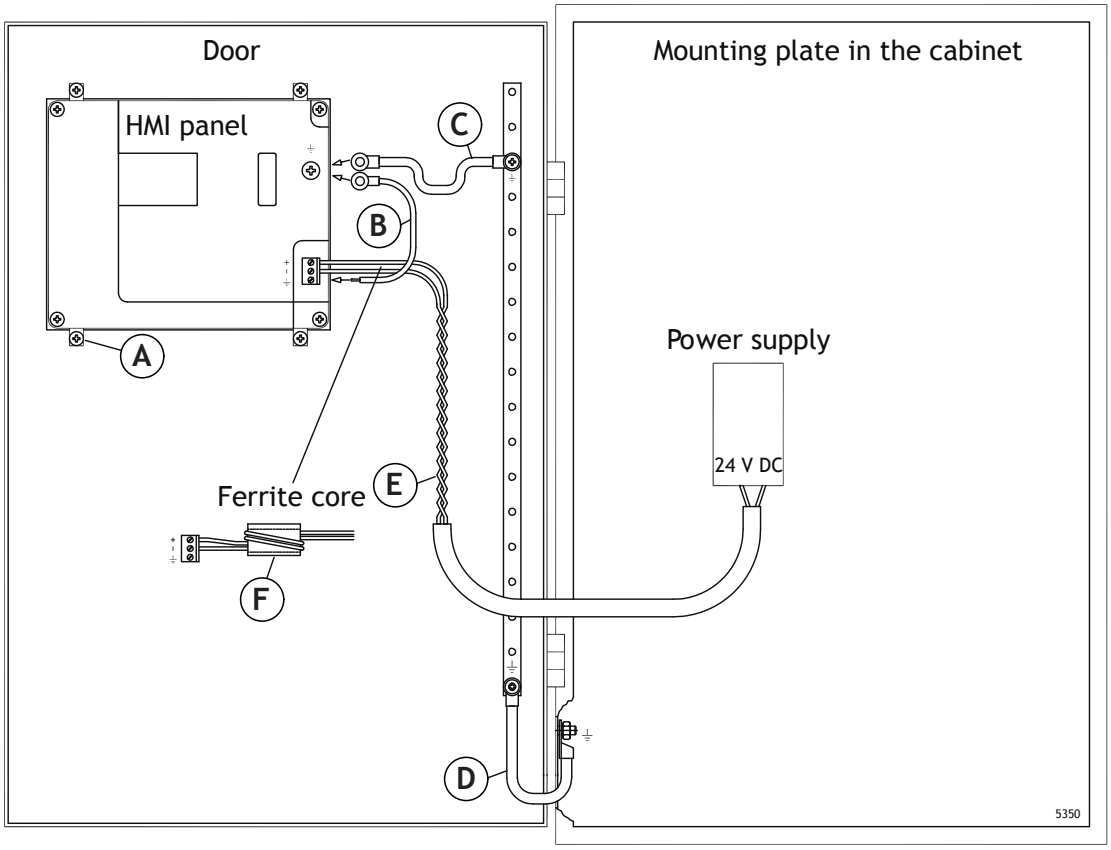

The mounting clamps **(A)** do not provide a secure grounding connection between the HMI panel and the cabinet. Follow the instructions below to ground the HMI panel correctly.

Cable recommendations

- Use short grounding wires with a large conductor area. A long, thin wire has high impedance at high frequencies and may not direct disturbances to ground effectively.
- Multi-wire conductors perform better than single-wire conductors of the same area.
- A braided conductor of the same area performs best.

Instructions

1. Connect a wire **(B)**, sized according to local electrical codes, between the quick-connect terminal connector on the HMI panel and the panel chassis.
2. Connect a wire or grounding braid **(C)**, sized according to local electrical codes, between HMI panel chassis and the closest grounding point on the door.
3. Connect a short, heavy grounding braid **(D)** between the door and the device cabinet.
4. Twist the cables onto the 24 V DC feed **(E)**.

NOTE

The number of turns around the ferrite core **(F)** affects suppression performance:

- 2 turns provides 4 times the suppression of 1 turn.
- 3 turns provides 9 times the suppression of 1 turn.

5.3.2. Grounding and Shielding Options for Ethernet Cabling

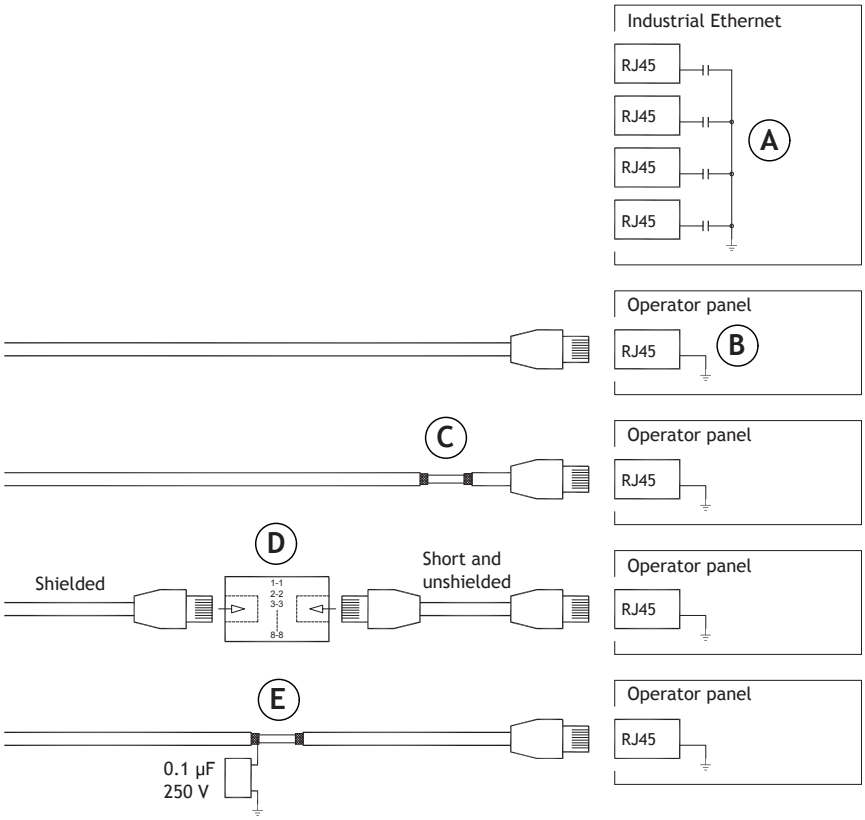

In some industrial Ethernet units, the RJ45 contact's shield may be connected to the chassis via a capacitor **(A)** or directly to the chassis **(B)**. Check whether the shield of the other Ethernet unit is grounded directly or via a capacitor. Connecting shielded Ethernet cabling to the chassis at both ends can create grounding loops and increase communication errors. In some cases, using unshielded cabling might reduce communication errors. Consider the following options:

- Use a shielded Ethernet cable but connect the shield at only one end (recommended).
- Break the shield **(C)**.
- Expand the shielded Ethernet cabling with a section of unshielded Ethernet cable **(D)**.
- Ground the shield via an external 0.1 µF/250 V film capacitor **(E)** to connect high-frequency transients to the ground.

5.3.3. Improving EMC Protection

Follow these recommendations if you experience communication problems or operate the HMI panel close to its temperature limits.

Cable recommendations

- Use original cabling from Beijer Electronics primarily.
- Use shielded cables for RS-232 communication.
- Use twisted pair and shielded cabling for RS-422 and RS-485.
- Use the cabling intended for the bus type; Ethernet, Profibus, CC-Link, CAN, DeviceNet etc.
- Install and connect according to the specifications for the relevant bus standard.
- Use shielded cabling for Ethernet, preferably with foil and a braided shield.
- Shielded D-sub covers are recommended. The shield should be connected to the cover at 360° where the cable enters.
- Ferrite cores that are snapped onto the shielded cabling may remove minor disturbances. Large ferrite pieces that are snapped onto unshielded cabling and where the wires go 2-4 times around the cores are approximately 5-25 times more efficient.

Instructions

1. Connect the shield at both ends.
   For longer distances, there is a risk of different ground potentials. In such cases, connect the shield at one end only. Alternatively, connect the other end of the shield to ground via a 0.1 µF / 250 V film capacitor, see image above. This setup connects both ends to ground in terms of high frequency (HF) while only grounding at one end in terms of low frequency (LF), mitigating the risk of 50/60 Hz grounding loops.

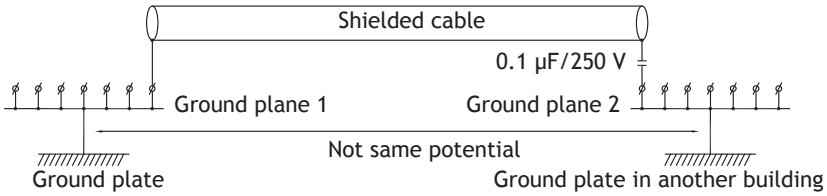

2. Use an EMC cable gland or regular plastic cable gland, remove the outer jacket and connect the shield to the installation plate with a 360° metal cable clamp.

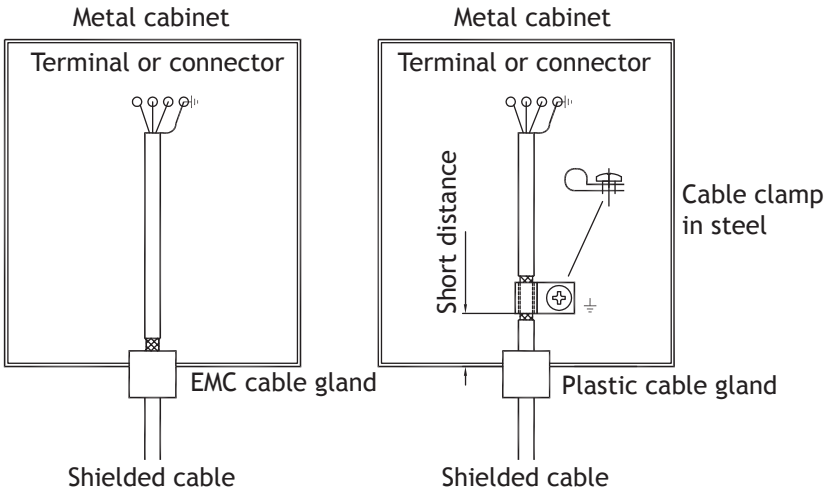

3. Place the 24 V DC and communications cabling in one cable trunk/cable duct and 230/380 V AC in another. If the cables need to be crossed, cross them at 90° only. Avoid combining the cabling for stronger 24 V DC outputs with the communication cabling.

5.3.4. Ambient Temperature

CAUTION

Do not exceed the maximum ambient operating temperature specified in Technical Data.

Ambient temperature is the temperature of the environment surrounding the HMI panel.

If the HMI panel is mounted in a cabinet, the ambient temperature is the air temperature inside the cabinet. Other devices in the cabinet generate heat and can raise this temperature significantly above the external room temperature.

On the front of the HMI panel, the ambient temperature is the higher of the following:

- The air temperature surrounding the panel.
- The surface temperature of the touchscreen.

For optimal product longevity, operate the HMI panel under standard ambient conditions, typically at temperatures between 20°C and 25°C and with low to moderate humidity.

NOTE

Direct sunlight can heat the touch panel and display above their specified ambient temperature limit, even when the air temperature is within range. Consider this when selecting the installation location.

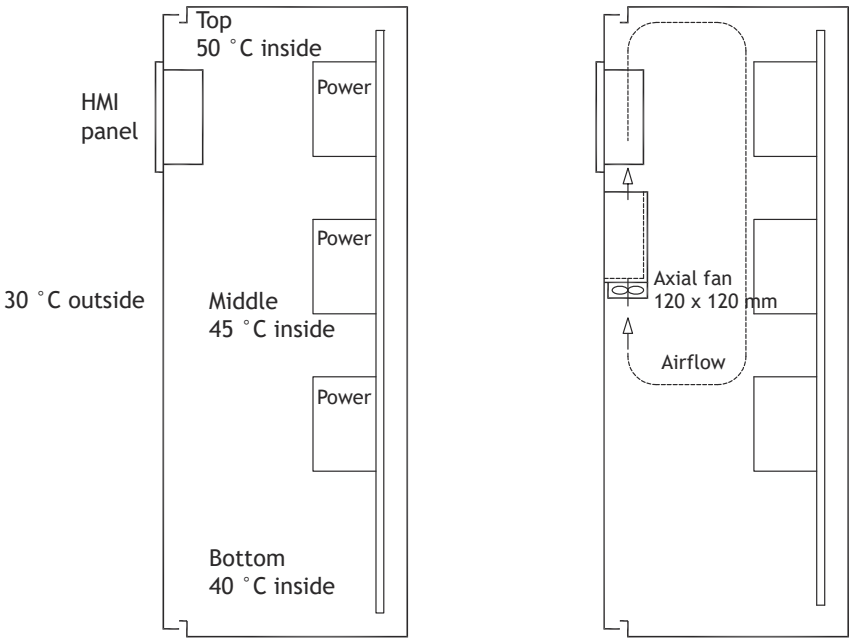

In tall cabinets with multiple heat-generating devices, the temperature at the top can be considerably higher than at the bottom. To estimate and control cabinet temperatures, use external tools such as those offered by **Rittal**.

Heat shortens the lifespan of electronic components. For example:

- An 8–10°C temperature increase can halve the lifespan of an electrolytic capacitor.
- A 15–20°C increase can reduce it to a quarter.

An enamel-coated steel cabinet has a radiant heat value of 5.5 W/m^2 per °C.

To calculate the approximate heat output of the HMI panel, multiply the supply voltage by the current draw. This assumes that all supplied power converts to heat.

5.3.4.1. Installing a Fan

Installing a fan inside the cabinet distributes heat evenly and improves cooling.

CAUTION

Do not mount the fan at the top of the cabinet. Drawing in warm air shortens the fan's lifespan.

1. Position the fan in a cooler area of the cabinet.
2. Direct the airflow toward the HMI panel.

5.3.5. Power Supply Safety

WARNING – RISK OF ELECTRIC SHOCK

- Verify that the power supply meets Safety Extra Low Voltage (SELV) requirements according to the Technical Data chapter.
- Keep the 24 V DC (SELV) electrical installation separated from other electrical Installations not complying with SELV/PELV requirements (e.g. 230 V AC mains).
- Verify that the clearance, creepage distance, and isolation between the installations comply with one of the following standards:
  - EN 62368-1 / IEC 62368-1 / UL 62368-1
  - EN 60950-1 / IEC 60950-1 / UL 60950-1
- Verify that the electrical installation complies with national safety regulations to avoid personal injury or property damage.

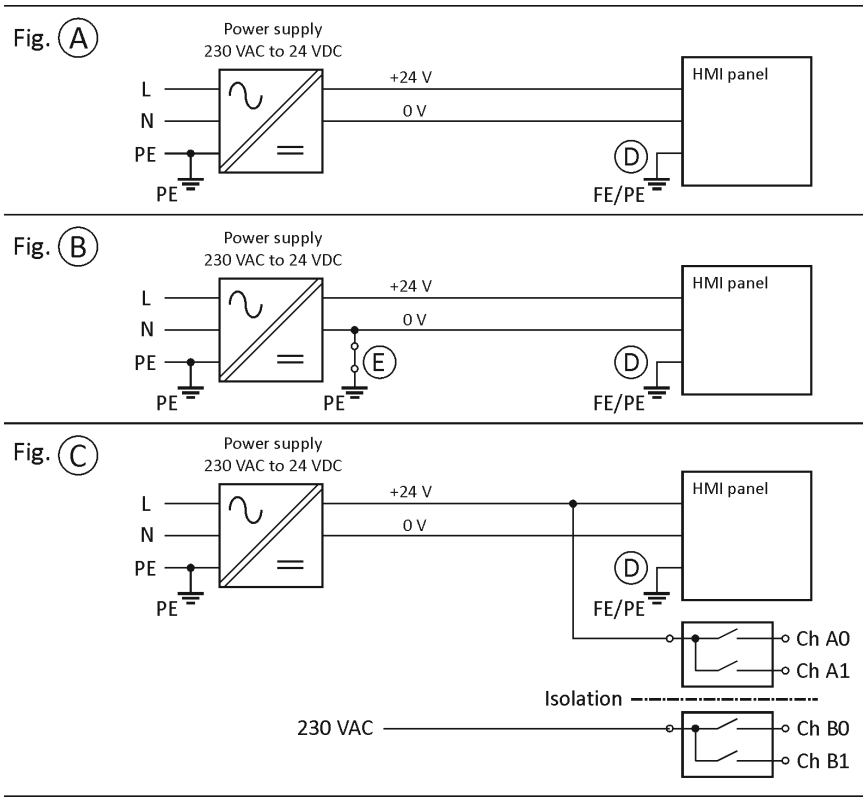

5.3.5.1. Power Supply for Single Unit

If the power supply powers one HMI panel, see figure **(A)** in the drawing.

- Connect the HMI panel to the power supply outputs directly.
- Make sure that the HMI panel is grounded according to the Grounding chapter.

5.3.5.2. Power Supply for Multiple Units

Use this configuration when the power supply powers multiple devices, for example multiple HMI panels and controllers. See figure **(C)** in the drawing.

- Connect all devices directly to the power supply outputs.
- Ground all HMI panels according to the Grounding chapter.
- Ground all other devices according to their specifications.

If 24 V DC relay contacts and 230 V AC relay contacts are used in the same electrical installation, ensure sufficient insulation distance, even during fault conditions. See Figure **(C)**.

Use a separate 24V power supply unit for the HMI panel to improve fault protection.

CAUTION

The HMI panel does not provide insulation for faults between 230 V AC and 24 V DC. Mixing 24 V relay contacts with 230 V AC relay contacts in a single controller (or single I/O module) can damage the HMI panel.

5.3.5.3. Grounding

Connect the panel to Functional Earth (FE), see detail **(D)** in the drawing.

- If a dedicated Functional Earth is not available, use Protective Earth (PE).
- Keep Power GND (0 V) and Functional/Protective Earth (FE/PE) separated.

In PELV systems according to IEC 60204-1, Power GND (0 V) and Functional/Protective Earth (FE/PE) may be connected to a common bonding network (CBN). See detail **(E)** in figure **(B)**.

If this configuration is used:

- Make sure that there is only one connection point between Power GND (0V) and Functional/Protective Earth (FE/PE).
- Place the connection point close to the power supply.
- Make sure the connection point is accessible and can be disconnected for insulation measurement.
- Do not add this kind of connection point near to the panel.
- Make sure that the panel output signals, including Signal GND/Secondary GND, are isolated from the enclosure and the cable shields.

5.3.6. Galvanic Isolation

The HMI panel is galvanically isolated from the 24 V DC power supply. However, the communication ports for RS-232, RS-422, RS-485, CAN, and USB are not galvanically isolated from each other. Only the Ethernet connection is galvanically isolated. Some models may also include a second DSUB connector with dedicated galvanic isolation.

The HMI panel enclosure, which is usually connected to Protective Earth (PE) or Functional Earth (FE), is also galvanically isolated from the 24 V DC power supply. The internal electronics on the secondary side of the DC/DC transformer are also isolated from the enclosure. See the electrical drawing below for details.

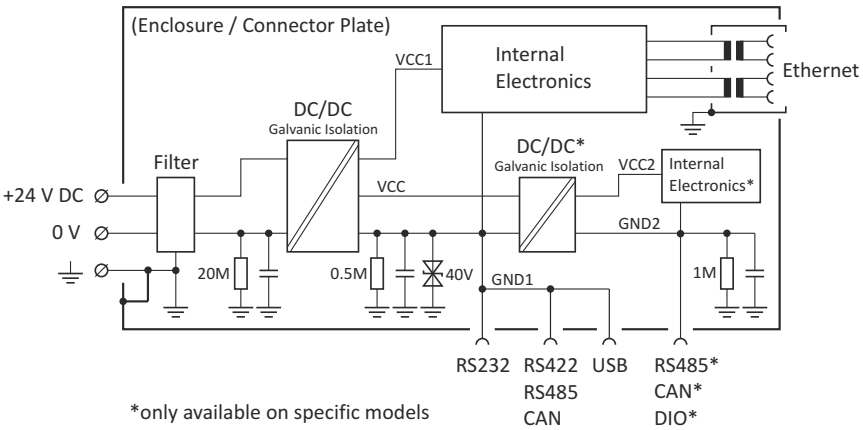

Galvanic isolation within the HMI panel architecture

On a typical PC, the enclosure is usually connected to Protective Earth. It is often also connected to Secondary GND (Signal GND) on the internal mainboard. This means that each Secondary GND pin on the I/O connectors may also be connected to Protective Earth.

If you connect a PC to the HMI panel, for example with a shielded cable where the shield is connected at both ends, the PC can short the isolated Protective Earth and Secondary GND on the panel side.

A similar effect can occur when you connect USB devices to the HMI panel. Some USB devices, such as USB drives or keyboards, connect the shield (connector shell) internally to Signal GND (USB GND).

Connecting a PC or USB device to the HMI panel can short Protective Earth and Secondary GND on the panel side. This can create unwanted ground loops and may affect EMC performance.

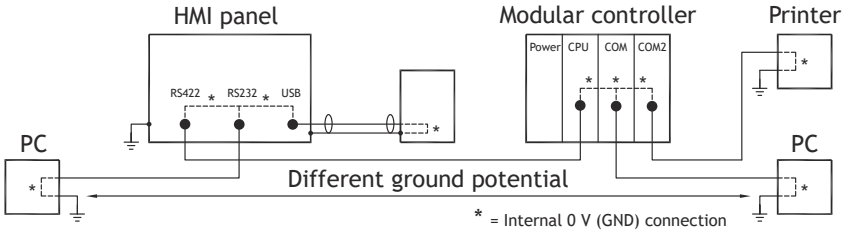

Ground loop example between connected devices

CAUTION

Keep the different grounding systems electrically isolated from each other.

Do not mix Primary GND (Power GND), Secondary GND (Signal GND), and Protective Earth or Functional Earth at different grounding points. Ground currents can then flow through communication cables or inside the HMI panel. This can cause communication errors or damage the product.

5.3.6.1. External Units for Galvanic Isolation

External units can enhance communication and provide galvanic isolation. However, this solution might introduce other issues when interfacing with other devices. It is essential to carefully assess compatibility to avoid unforeseen problems.

IMPORTANT

Ensure that the 24 V feed in the external insulation unit is not connected to any communication outlets. Inadequate insulation against the 24 V feed can cause disturbances and grounding currents from the 0 V on the 24 V side, disrupting communication.

TIP

Westermo offers reliable industry-standard insulators that are also insulated from the 24 V DC feed.

5.3.7. RS-485 Communication

For optimal performance in maximum transfer distance and speed, use shielded and twisted pair cables for RS-485 communication. The mutual capacitance should not exceed 52.5 pF/m, and the cable cross-sectional area should be at least 0.25 mm^2 (AWG 24).

Include the 0 V reference voltage for communication in the cabling. For two-way communication, use two pairs of wires: one pair for communication and one pair for 0 V.

Ground the shield at one end of the cable. Typically, the other end is also grounded. For longer distances or when ground potentials differ, connect the shield to the ground through a 0.1 µF / 250 V film capacitor to prevent ground currents in the shield. Some manufacturers recommend grounding the shield at each node. Consult the specific guidelines from bus termination system manufacturers as they may vary.

Depending on the design of the recipients, the bus wires may need to be at the same level or require pull-up or pull-down resistors to ensure no faulty signals are detected when the bus is idle (all transmitters are disconnected).

5.3.8. Image Sticking

When utilizing TFT LCD HMI panels in applications where a fixed or partially fixed image remains displayed on the screen for extended periods of time, users may experience a phenomenon referred to by the LCD industry as **Image Sticking**. Image sticking, sometimes also called "image retention" or “ghosting", is a phenomenon where a faint outline of a previously displayed image remains visible on the screen when the image is changed.

Potential causes of image sticking:

- Static images.
- No screensaver.
- Sharp contrast transition (e.g. black/white).
- High ambient temperatures.

Strategies for preventing or minimizing image sticking:

- Use the screensaver functionality.
- Change constantly between static and dynamic images.
- Avoid excessive brightness differences between foreground and background elements.
- Use colors with similar brightness.
- Use complementary colors in follow-up images.

6. Service and Maintenance

WARNING

- Before performing any service or maintenance, disconnect the equipment from the power supply.
- Only qualified personnel may perform service and repairs. The agreed warranty applies.

6.1. Touch Screen Care

Follow these recommendations to maintain the lifetime of the touch screen:

- Use your fingers or a dedicated touch pen. Do not use hard or sharp-edged objects such as ballpoint pens, screwdrivers, or credit cards. These can damage the top foil and resistive (ITO) layer over time.
- Do not apply high force when tapping the touch screen, especially when using a touch pen with a small tip.
- Protect the touch screen from direct sunlight, especially in hot environments. Sunlight can raise the temperature of the touch screen above its ambient temperature rating. Excessive UV light can damage the touch screen over time.
- In harsh or dirty environments, apply a touch protection foil on top of the touch screen to extend its lifetime. Use a foil with UV protection if needed.
- Do not use excessive pressure when cleaning the touch screen.
- In harsh or dirty environments, apply a touch protection foil on the touch screen to extend its lifetime. Use a foil with UV protection if needed. For more information, see Touch Screen Protector.

6.2. Cleaning the Touch Screen

WARNING

Electrostatic hazard. Do not rub or clean the device with solvents or a dry cloth in a potentially explosive atmosphere. Use a soft, damp cloth only.

- Use a dry, lint-free microfiber cloth for regular dust removal.
- Use one of the following cleaning agents when needed:
  - Ammonia-based glass cleaners (5–10% ammonia)
  - 75% alcohol
  - Mild neutral detergent diluted in distilled water (1:10 ratio)

  For other solvents, follow the manufacturer's instructions.
- Inspect the surface for physical damage before cleaning.
- Clean any spills of food or drinks from the touch screen immediately.
- Keep moisture away from the cable connection area during cleaning.

- Ensure adequate ventilation when using cleaning agents.

CAUTION

- Cleaning agents that contain bleach, alcohol, or ammonia can damage touch panel coatings and ITO film. Do not leave the agent on the surface for more than 2 minutes. Remove all residue after cleaning.
- Do not use sharp tools for cleaning.
- Do not use air guns, water jets, or steam to clean the touch screen. These can damage the touch screen functionality.
- Do not use acetone or other strong organic solvents. These dissolve the polymer materials in the touch screen surface.

WARNING

Do not mix bleach and ammonia. Mixing these chemicals causes a dangerous reaction.

6.2.1. Cleaning the Touch Screen with a Cleaning Agent

1. Power off the device.
2. Inspect the touch screen surface for damage. Do not clean a damaged surface.
3. Apply the cleaning agent (alcohol, bleach, or glass cleaner) to a clean microfiber cloth until the cloth is well saturated. Do not spray the cleaning agent directly onto the display.
4. Wipe the touch panel surface in a Z motion. Do not apply excessive pressure.

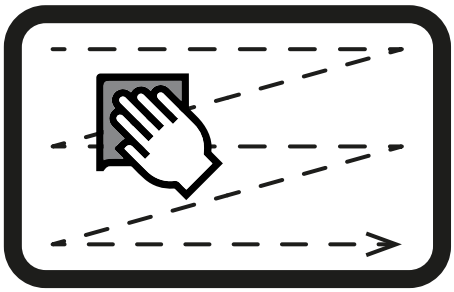

5. Dry the panel with a dry microfiber cloth. Remove as much of the cleaning agent as possible.
6. If you used a detergent-based cleaning agent, wipe the surface once more with a cloth dampened with distilled water to remove any residue.

6.3. Air Bubbles in the Touch Screen

The layer structure of the touch screen contains air. In rare cases, the appearance of bubbles can arise. This is purely cosmetic and does not affect the functionality of the HMI panel. The appearance can occur under certain environmental conditions such as changes in temperature, humidity, or atmospheric pressure.

6.4. Battery Replacement

This product does not contain user serviceable parts. An authorized Beijer Electronics service center must replace the battery.

7. Dismantling and Disposal

- Recycle the HMI panel and parts of it according to local regulations.
- The following components contain substances that might be hazardous to health and the environment: lithium battery, electrolytic capacitor, and display.

Head Office
Beijer Electronics AB
Box 426
201 24 Malmö, Sweden
www.beijerelectronics.com / +46 40 358600

Beijer
ELECTRONICS